Power Electronics – The Key Technology for Renewable Energy System Integration

Frede Blaabjerg

Professor, IEEE Fellow
fbl@et.aau.dk

Aalborg University
Department of Energy Technology
Aalborg, Denmark

AALBORG UNIVERSITY
DENMARK

Outline

- **Overview of power electronics and renewable energy system**
  State-of-the-art; Technology overview, global impact
- **Demands for renewable energy systems**
  PV; Wind power; Cost of Energy; Reliability, Mission Profiles, Grid Codes
- **Power converters for renewables**
  PV inverters at different power; Wind power application; Power semiconductor devices
- **Control for renewable systems**
  PV application; Wind power application
- **Summary**

Aalborg University and
Department of Energy Technology

Aalborg University - Denmark

Inaugurated in 1974
22,000 students
2,000 faculty

BREAKING NEW GROUND
AALBORG UNIVERSITY

PBL-Aalborg Model
(Project-organised and problem-based)

Aalborg University - Campus


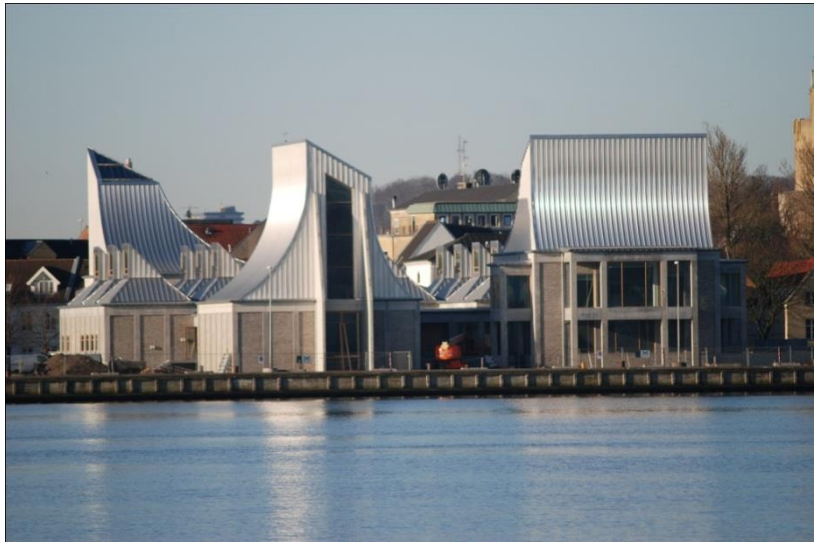


Overview of power electronics technology and renewable energy systems

State of the Art – Renewable Evolution

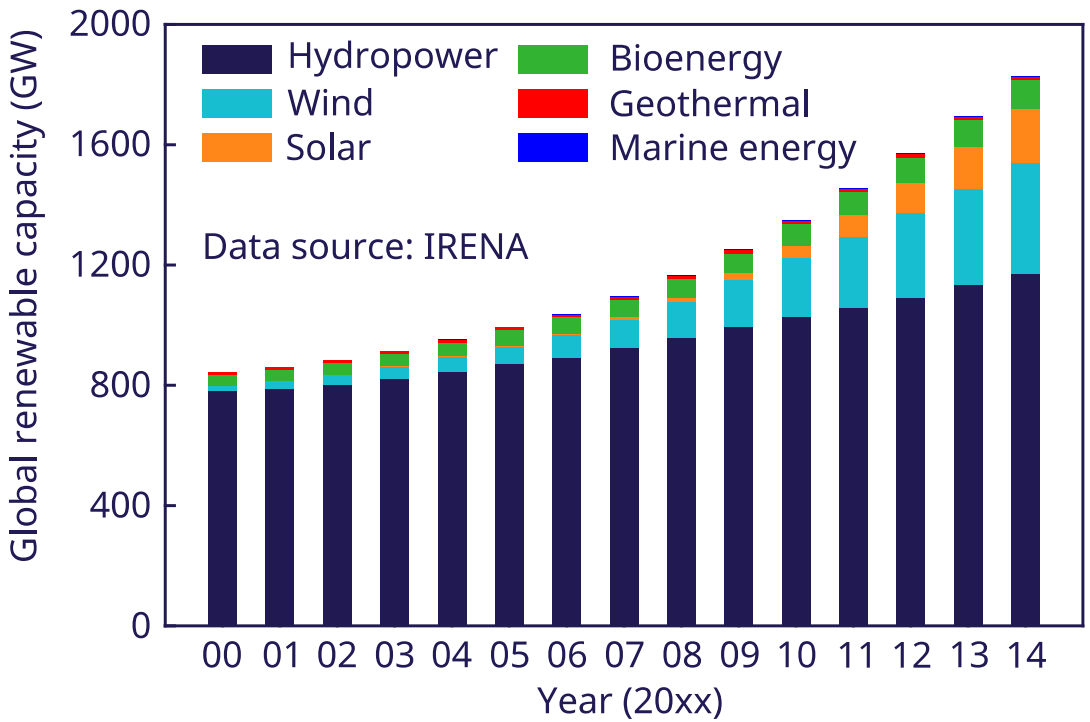

Worldwide Installed Renewable Energy Capacity (2000-2014)

1. Hydropower also includes pumped storage and mixed plants;
2. Marine energy covers tide, wave, and ocean energy

(Source: "Renewable energy capacity statistics 2015", http://www.irena.org/publications, June 2015)

Chapter 01 in *Renewable energy devices and systems with simulations in MATLAB and ANSYS*, Editors: F. Blaabjerg and D.M. Ionel, CRC Press LLC, 2017

Global RES Annual Changes

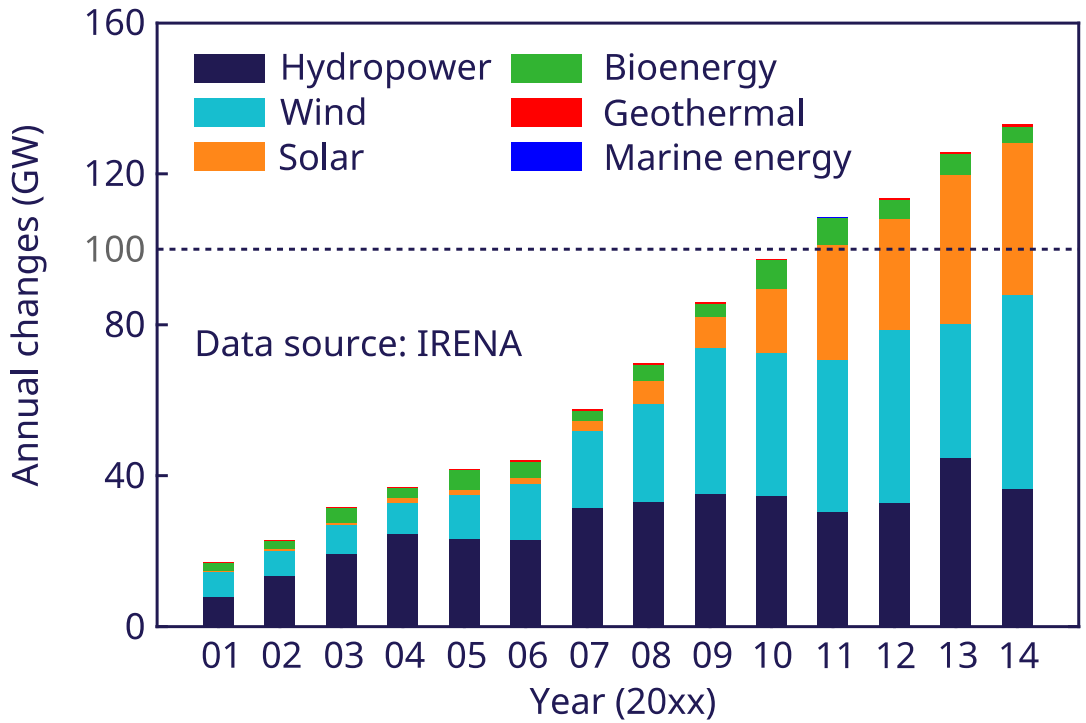

Global Renewable Energy Annual Changes in Gigawatt (2001-2014)

1. Hydropower also includes pumped storage and mixed plants;
2. Marine energy covers tide, wave, and ocean energy

(Source: "Renewable energy capacity statistics 2015", http://www.irena.org/publications, June 2015)

Chapter 01 in *Renewable energy devices and systems with simulations in MATLAB and ANSYS*, Editors: F. Blaabjerg and D.M. Ionel, CRC Press LLC, 2017

Share of the Net Total Annual Additions

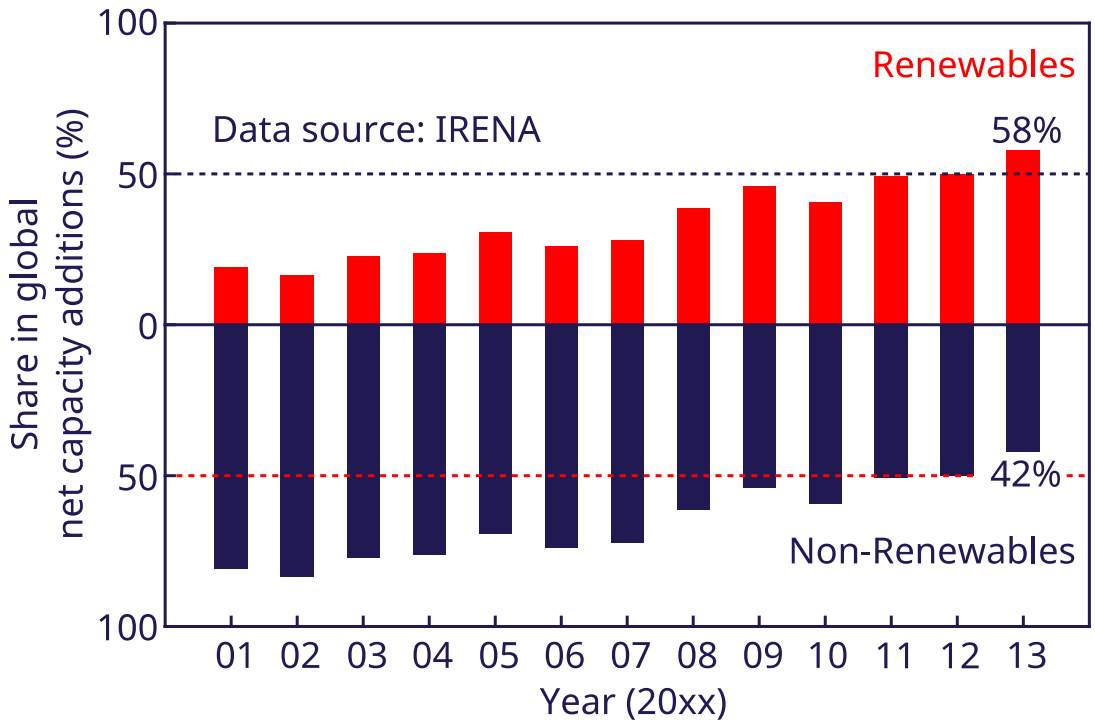

RES and non-RES as a share of the net total annual additions

1. Hydropower also includes pumped storage and mixed plants;
2. Marine energy covers tide, wave, and ocean energy

(Source: "Renewable energy capacity statistics 2015", http://www.irena.org/publications, June 2015)

Chapter 01 in *Renewable energy devices and systems with simulations in MATLAB and ANSYS*, Editors: F. Blaabjerg and D.M. Ionel, CRC Press LLC, 2017

Renewable Electricity in Denmark

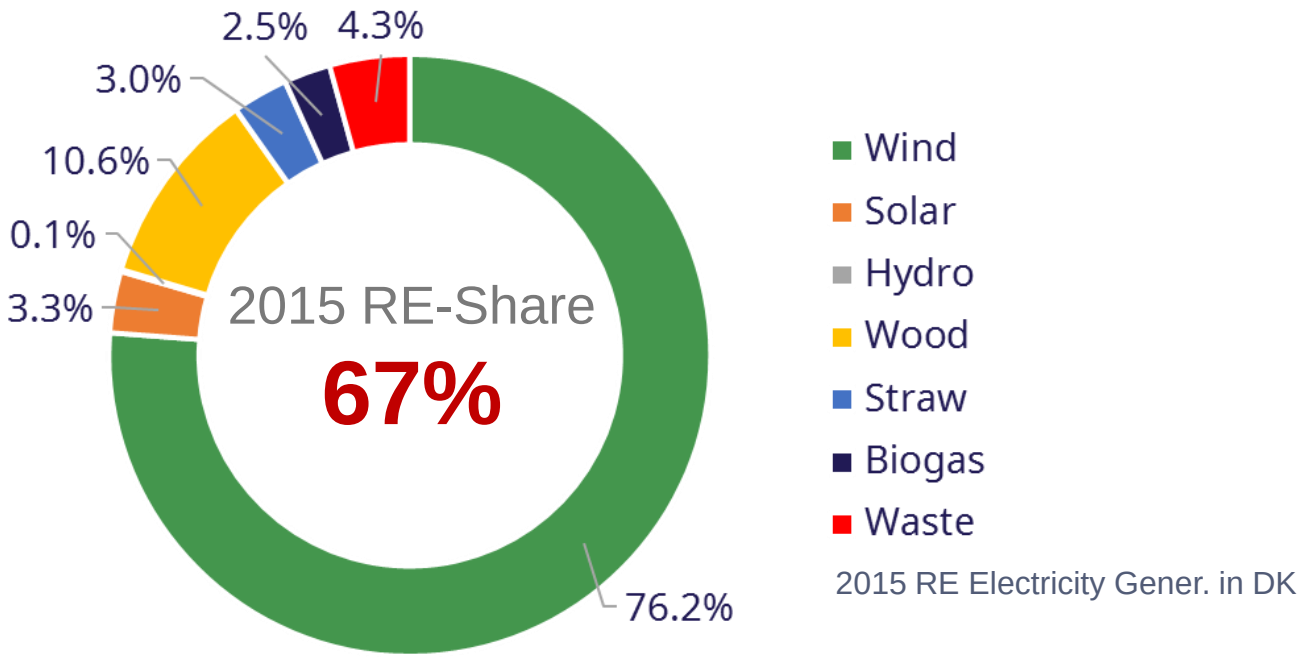

Proportion of renewable electricity in Denmark (*target value)

Key figures	2011	2015	2025	2035
Wind share of net generation in year	29.4%	51.0%	**58%***	
Wind share of consumption in year	28.3%	42.0%	**60%***	
RE share of net generation in year	41.1%	66.9%	**82%***	**100%***
RE share of net consumption in year	39.5%	55.2%		

Energinet.dk, *Electricity Generation*, http://www.energinet.dk/EN/KLIMA-OG-MILJOE/Miljoerapportering/Elproduktion-i-Danmark/Sider/Elproduktion-i-Danmark.aspx

Energy and Power Challenge in DK

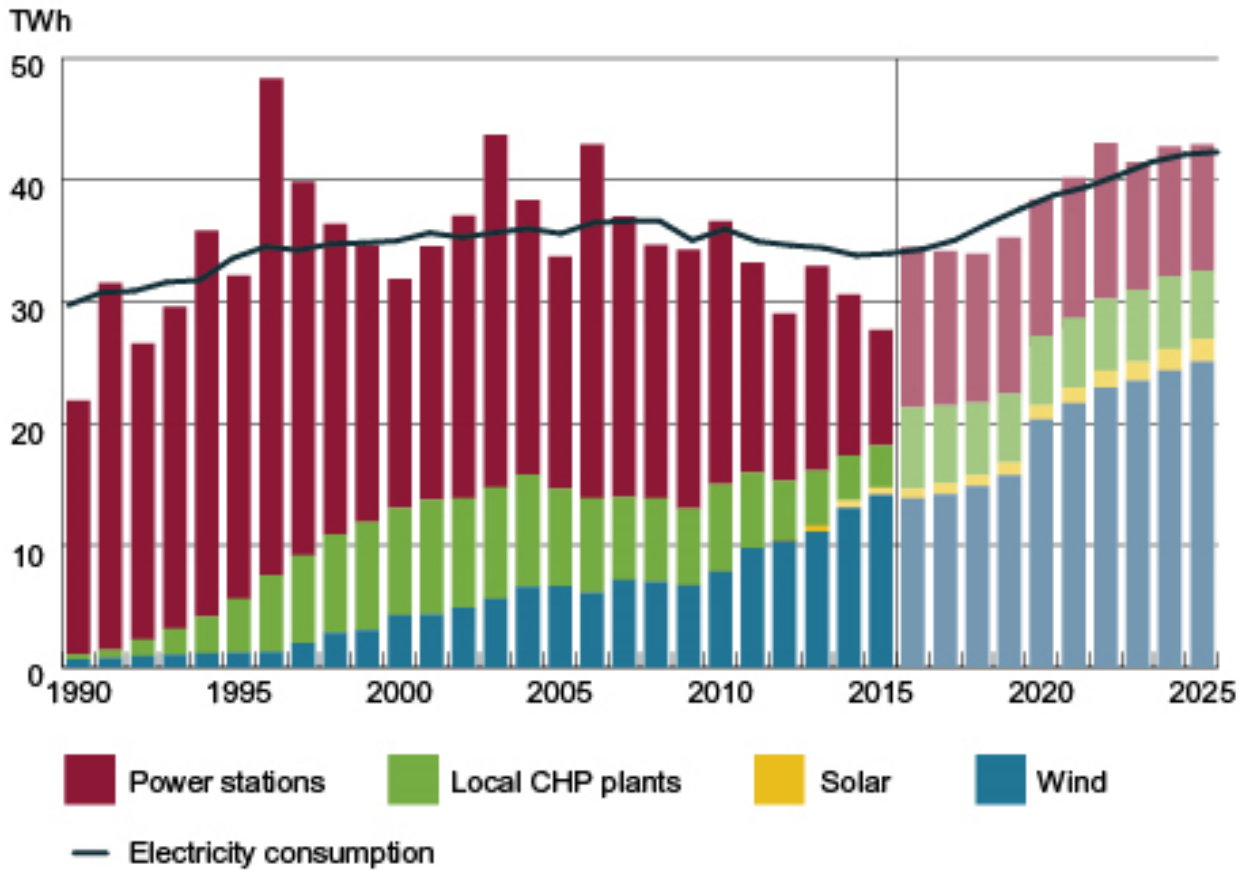

Very High Coverage of Distributed Generation

Energinet.dk, *Electricity Generation*, http://www.energinet.dk/EN/KLIMA-OG-MILJOE/Miljoerapportering/Elproduktion-i-Danmark/Sider/Elproduktion-i-Danmark.aspx

Energy and Power Challenge in DK

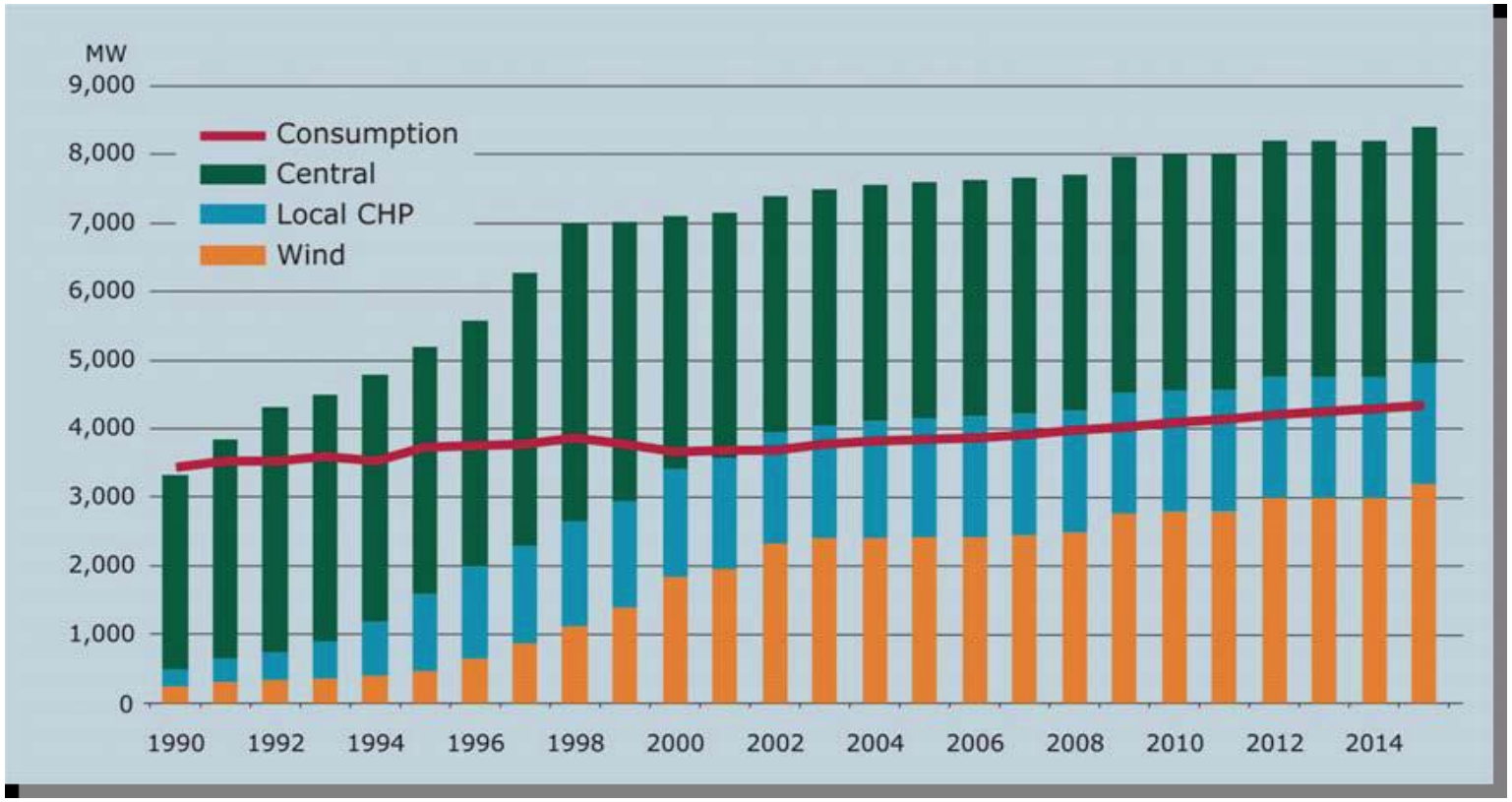

Very High Coverage of Distributed Generation

Development of Electric Power System in Denmark

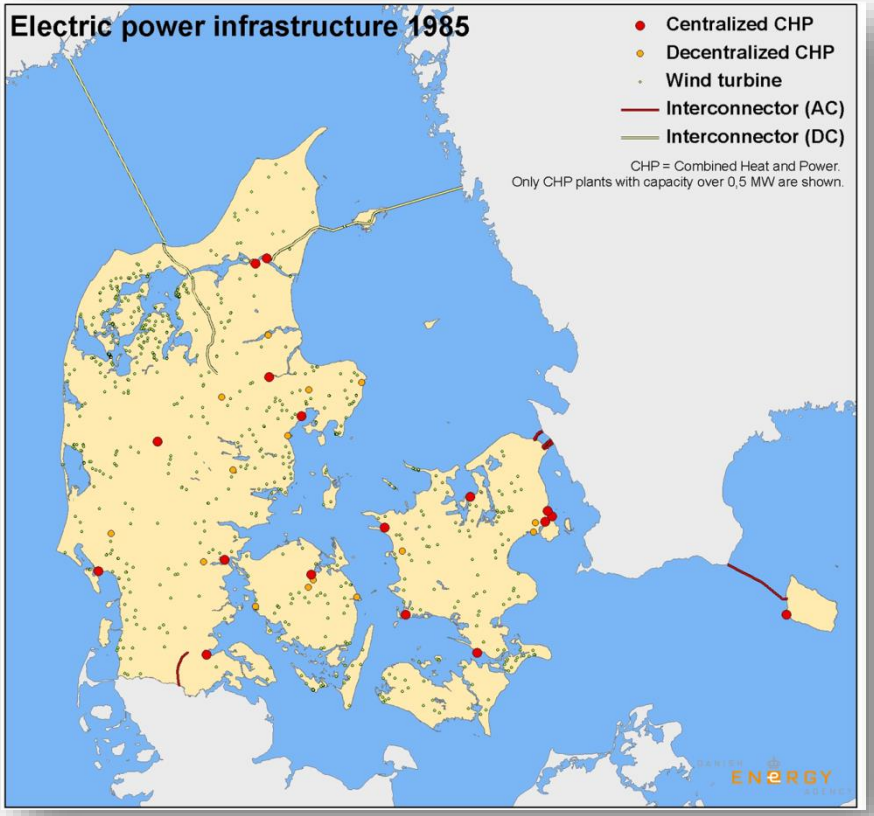

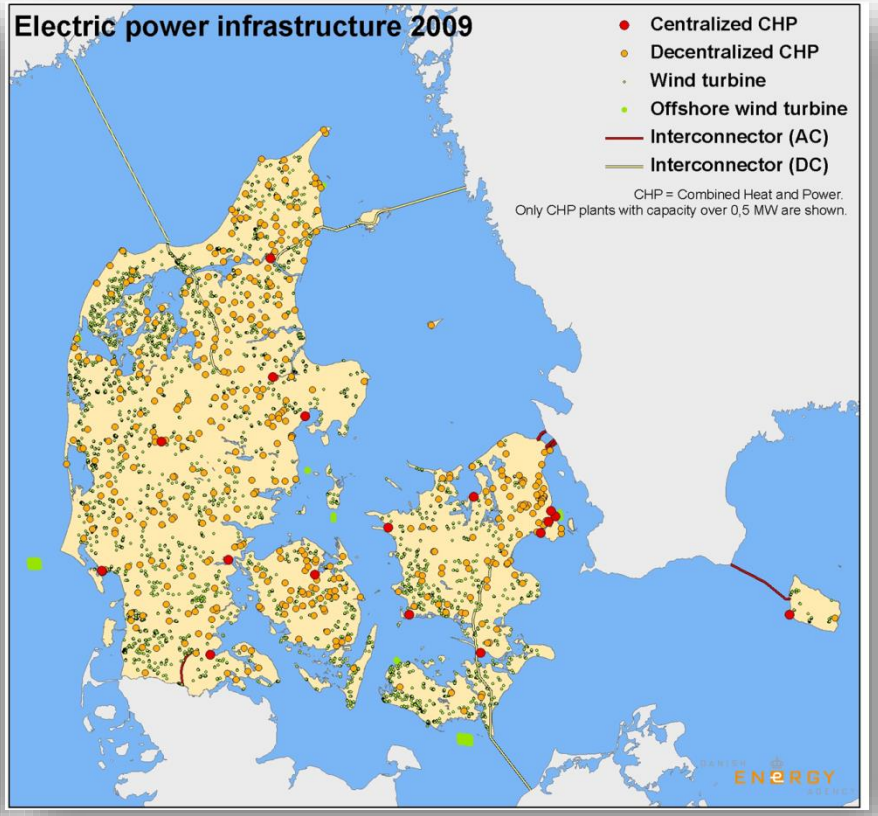

From Central to De-central Power Generation

Danish Energy Agency, https://ens.dk/en/our-services/statistics-data-key-figures-and-energy-maps/energy-infomaps

State of the Art Development – Wind Power

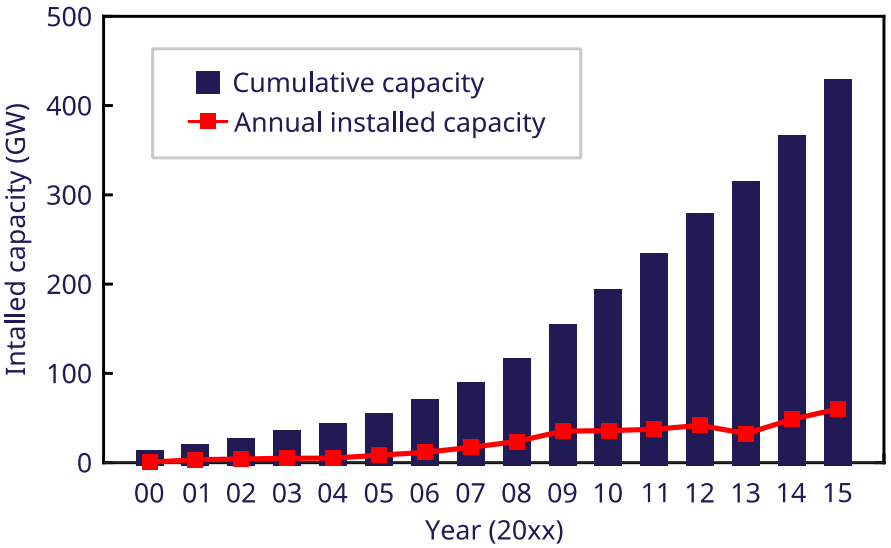

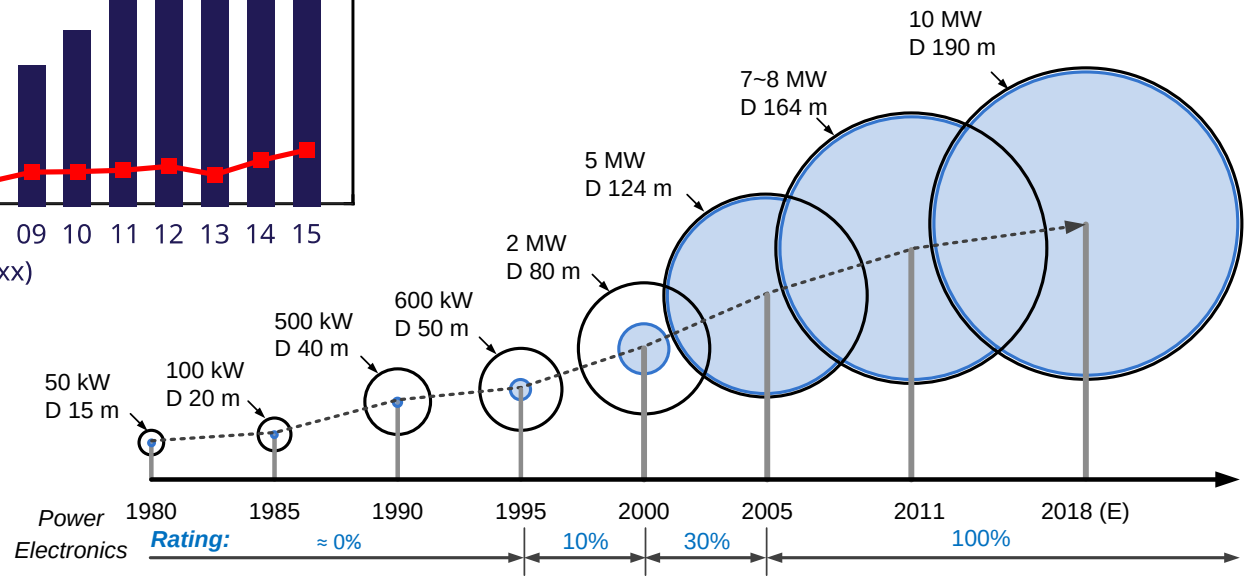

Global installed wind capacity (until 2015): 433 GW, 2015: 63.5 GW

- Higher total capacity (55 % non-hydro renewables).
- Larger individual size (average 1.8 MW, up to 6-8 MW).
- More power electronics involved (up to 100 % rating coverage).

Global Wind Energy Council, http://www.gwec.net/wp-content/uploads/vip/GWEC-Global-Wind-2015-Report_April-2016_22_04.pdf

Top 5 Wind Turbine Manufacturers & Technologies

Manufacturer	Concept	Rotor Diameter	Power Range
Goldwind (China)	PMSG IG	70 – 109 m 110 m	1.5 – 2.5 MW 3 MW
Vestas (Denmark)	DFIG PMSG	80 –110 m 105 – 164 m	1.8 – 2 MW 3.3 – 8 MW
GE Energy (USA)	DFIG PMSG	77 – 120 m 113 m	1.5 – 2.75 MW 4.1 MW
Siemens (Germany)	IG PMSG	82 – 120 m 101 – 154 m	2.3 – 3.6 MW 3 – 6 MW
Gamesa (Spain)	DFIG PMSG	52 –114 m 128 m	0.85 – 2 MW 4.5 MW

DFIG: Doubly-fed induction generator

PMSG: Permanent magnet synchronous generator

IG: Induction generator

SG: Synchronous generator

State of the Art – PV Cell Technologies

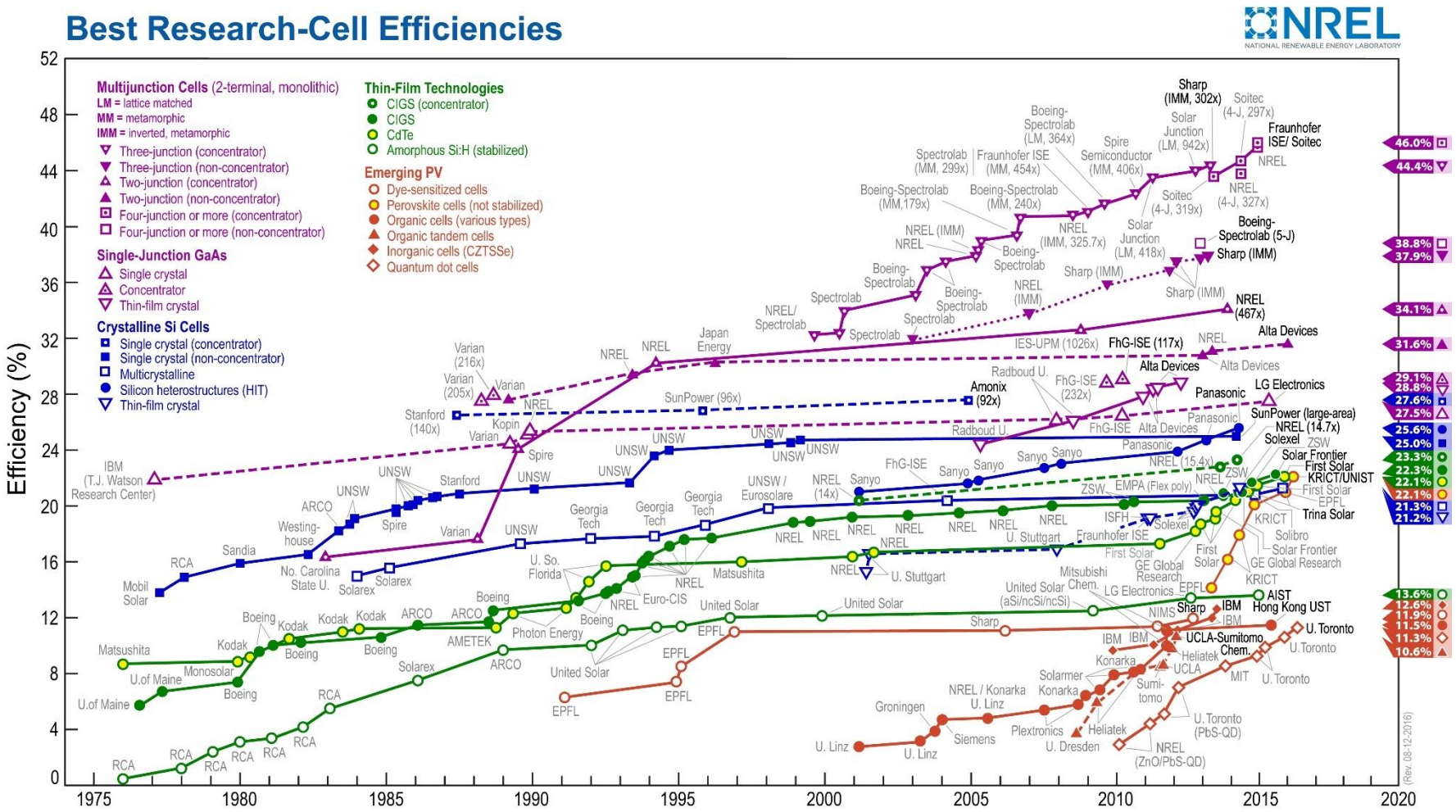

National Renewable Energy Laboratory, http://www.nrel.gov/pv/assets/images/efficiency_chart.jpg

Top 10 PV Cell Manufacturers & Technologies

Top Ten PV Cell Technology Focus and Module Assembly Capacity 2015

Manufacturer	Technology	Module Assembly Capacity (MW)
Trina (CN/NL)	c-Si	510
JA Solar (CN/MY)	c-Si	400
Hanwha Q-Cells (CN/DE/MY/KR)	c-Si	430
Canadian Solar (CN)	c-Si	430
First Solar (US/MY)	CdTe/c-Si	290
Jinko Solar (CN/MY)	c-Si	470
Yingli Solar (CN)	c-Si	245
Motech Solar (Taiwan/CN)	c-Si	140
NeoSolar (Taiwan/CN)	c-Si	50
Shunfeng-Suntech (CN/US)	c-Si	200

c-Si: Crystalline silicon

CdTe: Cadmium telluride

Paula Mints, 2015 Top Ten PV Cell Manufacturers, http://www.renewableenergyworld.com/articles/2016/04/2015-top-ten-pv-cell-manufacturers.html

State of the Art Development – Photovoltaic Power

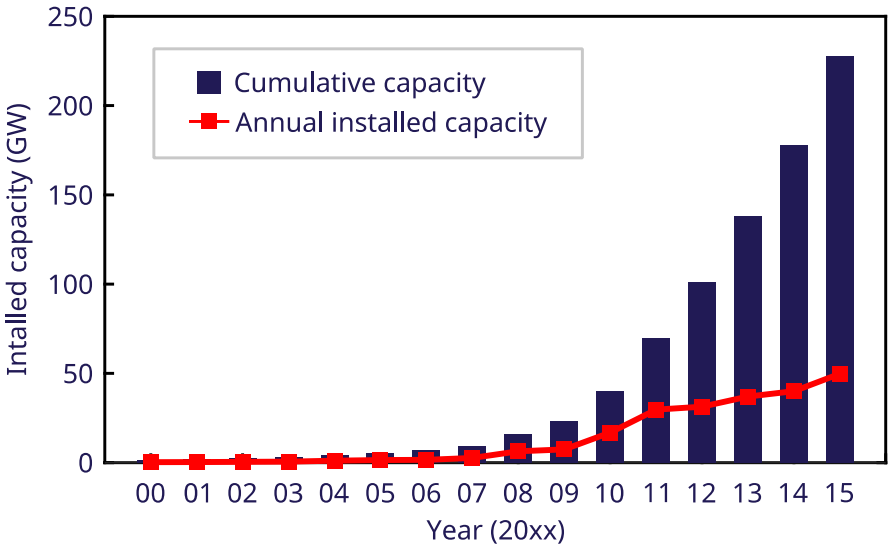

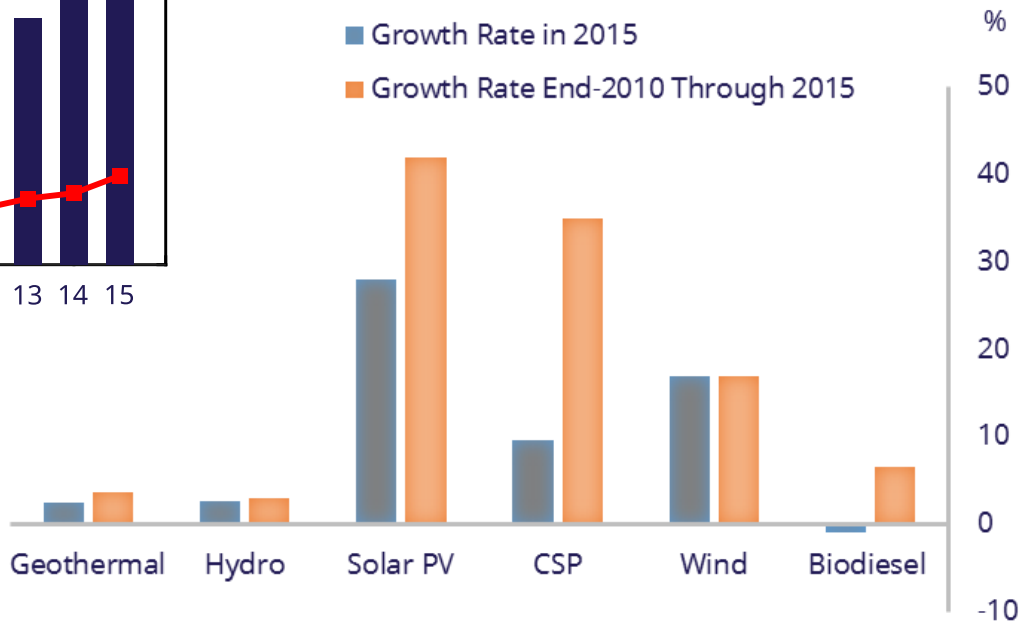

Global installed solar PV capacity (until 2015): 227 GW, 2015: 50 GW

- More significant total capacity (29 % non-hydro renewables).
- Fastest growth rate (42 % between 2010-2015).

SolarPower Europe, http://www.solarpowereurope.org/home/
REN21, Renewables 2016, http://www.ren21.net/wp-content/uploads/2016/10/REN21_GSR2016_FullReport_en_11.pdf

Top 5 Global Photovoltaic Inverter Supplier

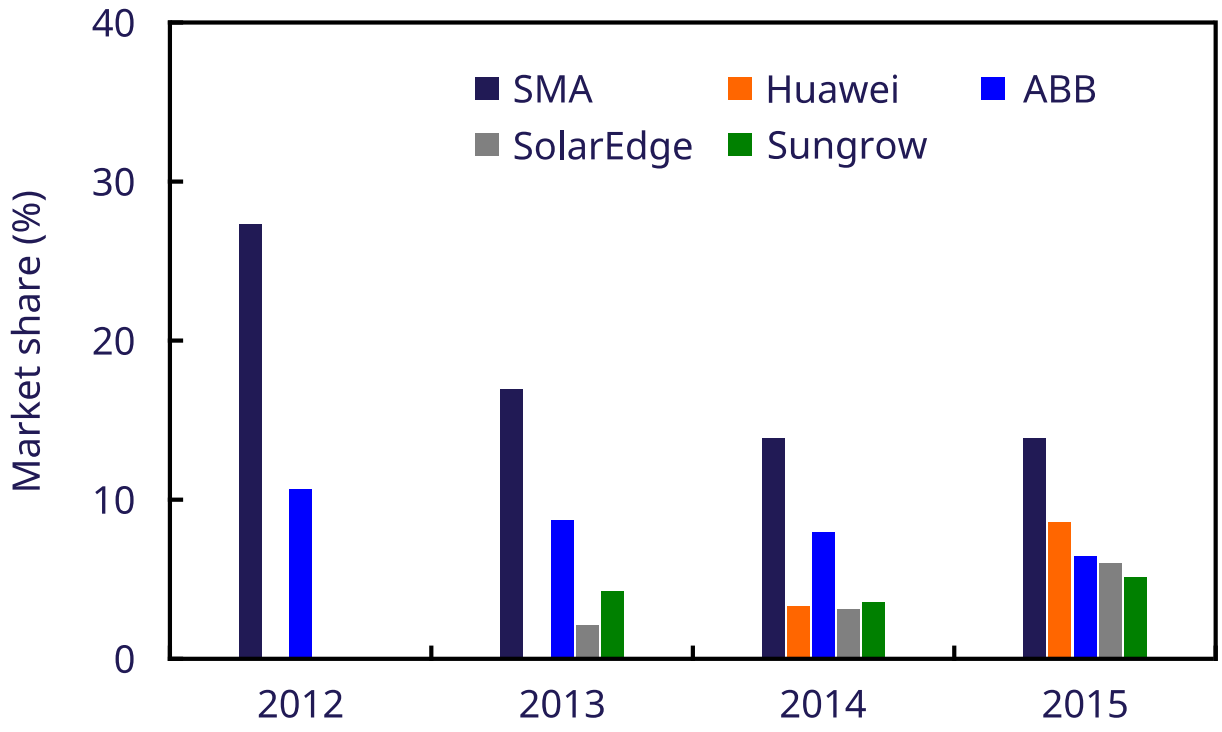

Global Market Share (% of $M) of Top Five PV Inverter Suppliers (2012-2015)

1. Market share is not shown when less than 2%;
2. Suppliers shown are top five in 2015.

Figure Adapted according to the report by IHS

IHS, *SMA Retains Top Ranking in Global PV Inverter Market, but Competitors are Gaining*, http://press.ihs.com/press-release/technology/sma-retains-top-ranking-global-pv-inverter-market-competitors-are-gaining-i

Demands for renewable energy systems

Requirements for Wind Turbine Systems

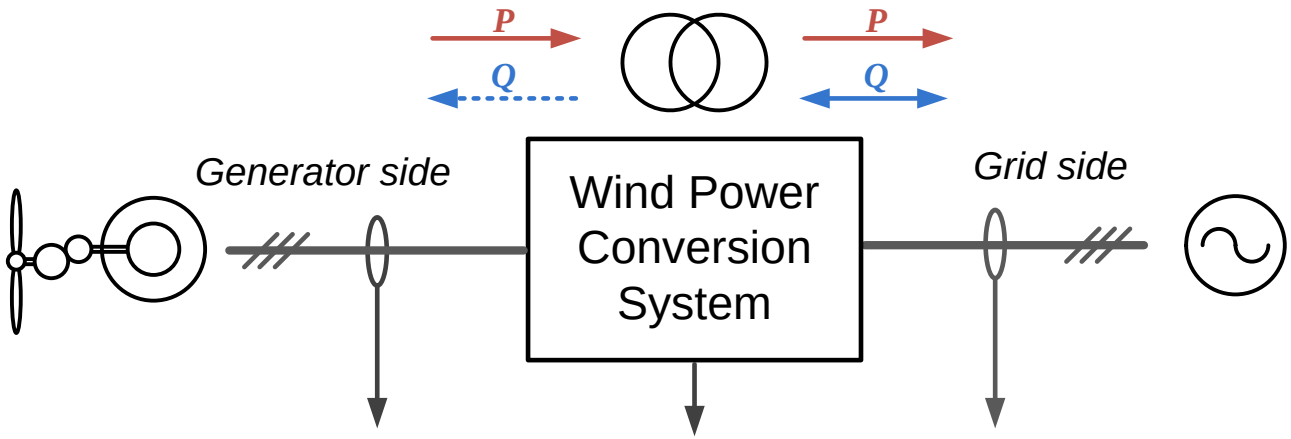

1. Controllable *I*
2. Variable *freq & U*

1. Energy balance/storage
2. High power density
3. Strong cooling
4. Reliable

1. Fast/long *P* response
2. Controllable/large *Q*
3. *Freq* & *U* stabilization
4. Low Voltage Ride Through

General Requirements & Specific Requirements

Input mission profiles for wind power application

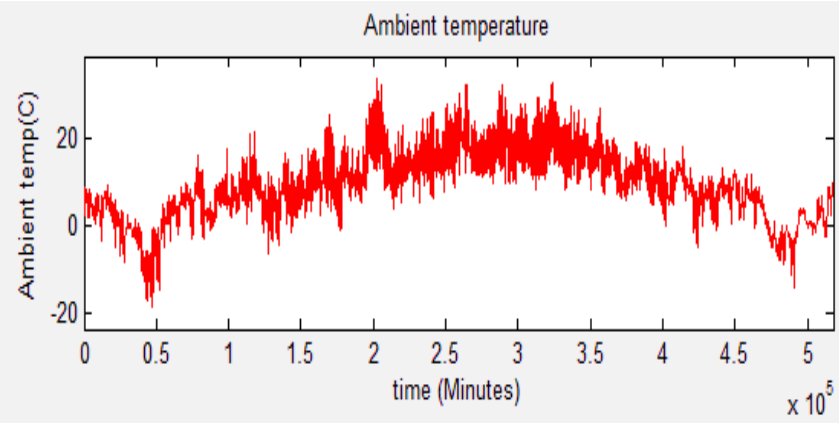

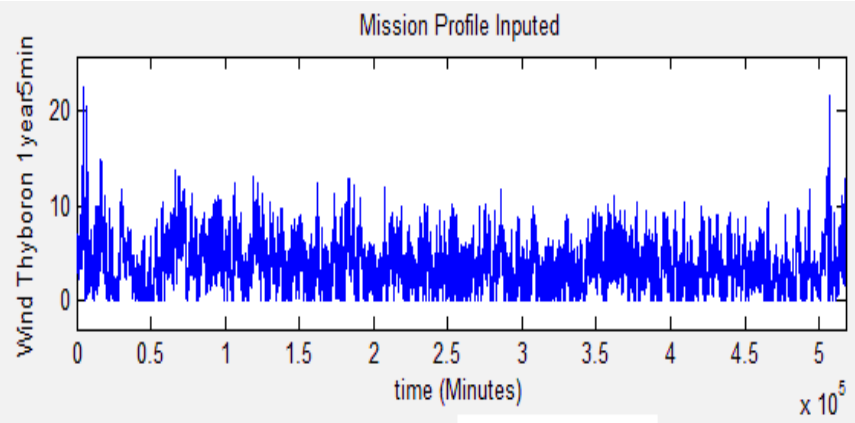

Ambient temperature

Wind speed

Mission profile for wind turbines in Thyboron wind farm

- Highly variable wind speed
- Different wind classes are defined - turbulence and avg. speed
- Large power inertia to wind speed variation – stored energy in rotor.
- Large temperature inertia to ambient temp. variation – large nacelle capacity

Grid Codes for Wind Turbines

Conventional power plants provide active and reactive power, inertia response, synchronizing power, oscillation damping, short-circuit capability and voltage backup during faults.

Wind turbine technology differs from conventional power plants regarding the converter-based grid interface and asynchronous operation

Grid code requirements today

- Active power control
- Reactive power control
- Frequency control
- Steady-state operating range
- Fault ride-through capability

Wind turbines are active power plants.

Power Grid Standards – Frequency/Voltage Support

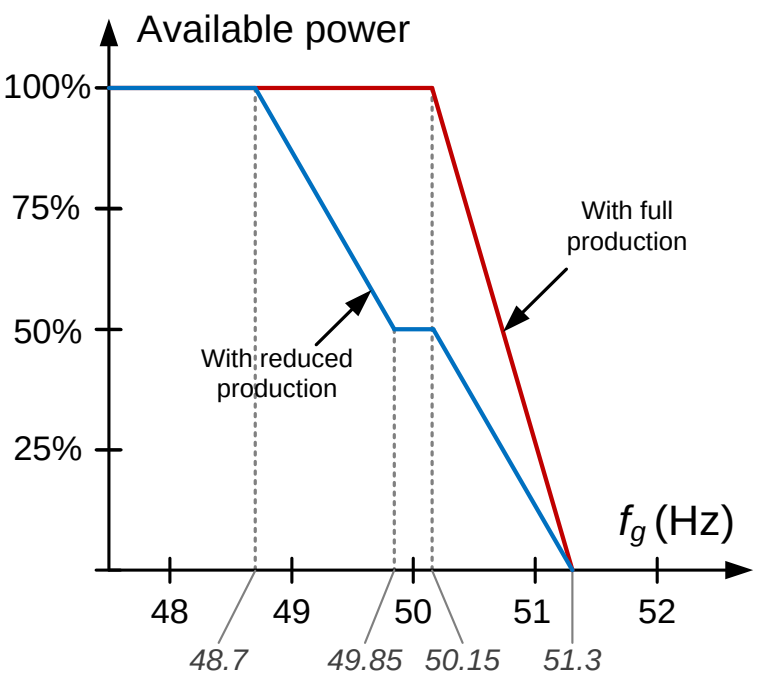

Freq. – P control

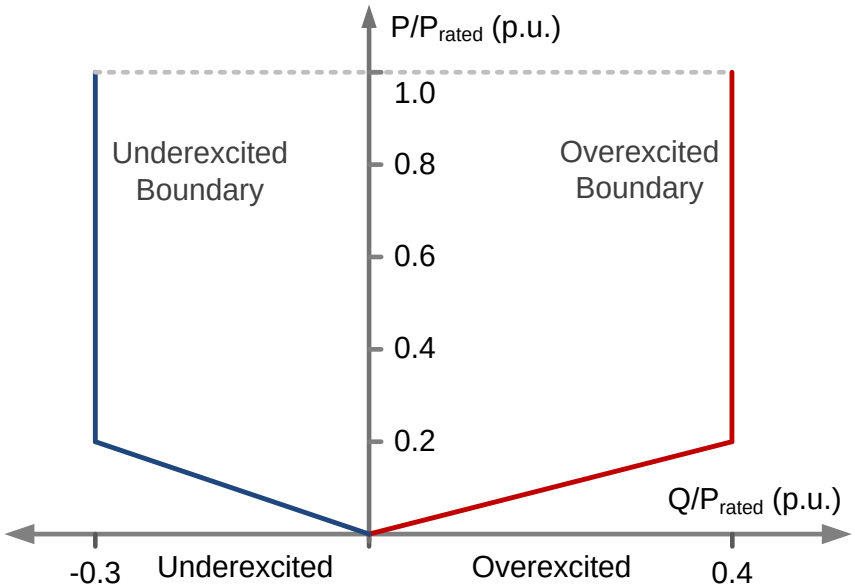

Q ranges under different generating *P*

- Frequency control through active power regulation.
- Reactive power control according to active power generation.
- Voltage support through reactive power control.

Power Grid Standards – Ride-Through Operation

Requirements during grid faults

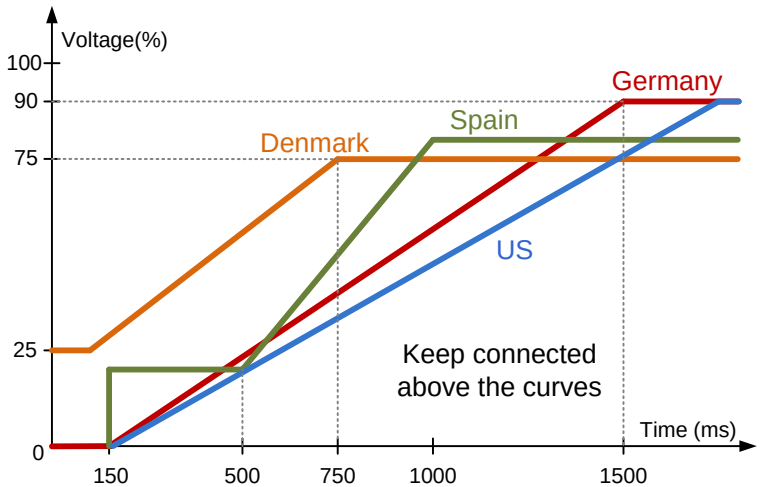

Grid voltage dips vs. withstand time

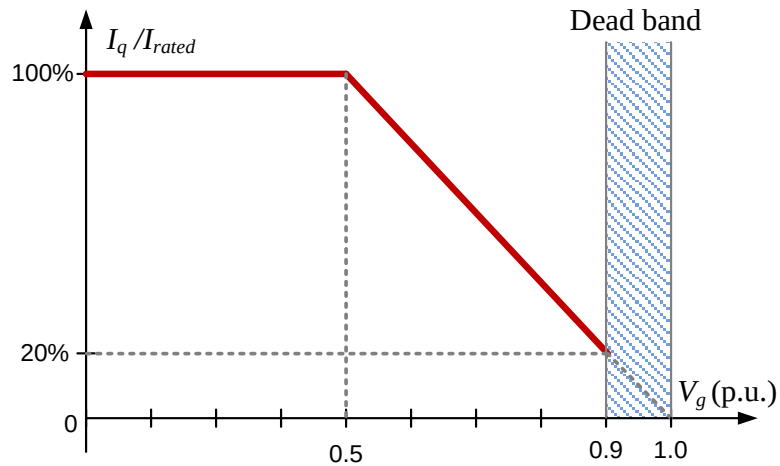

Reactive current vs. Grid voltage dips

- Withstand extreme grid voltage dips.
- Contribute to grid recovery by injecting I_q.
- Higher power controllability of converter.

Requirements for Photovoltaic Systems

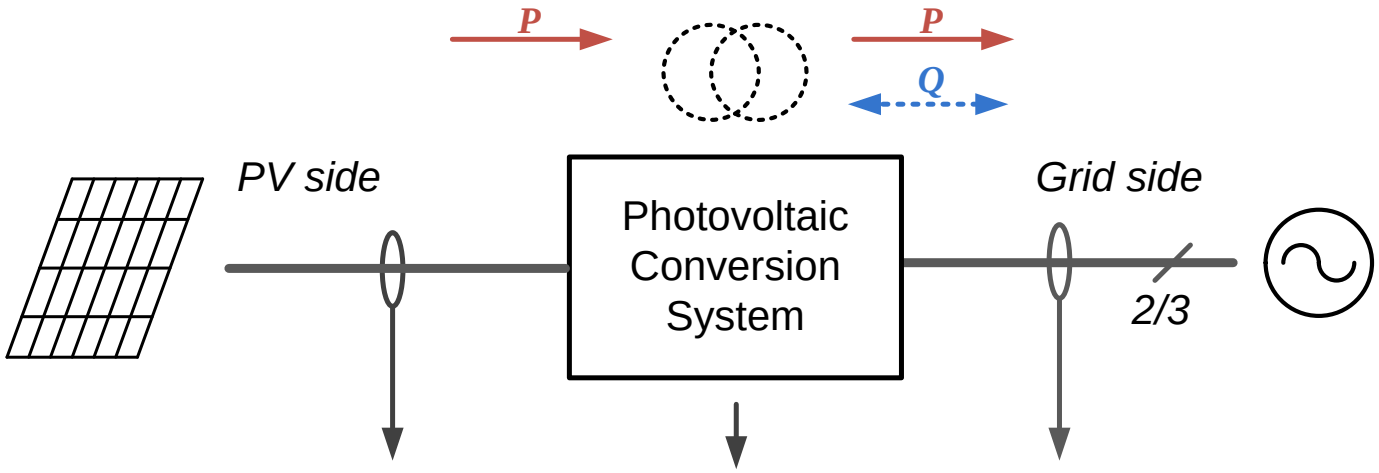

1. Controllable *I* / (MPPT)
2. DC voltage / current
...

1. High efficiency
2. Temp. insensitive
3. Reliable
4. Safety
5. Communications

1. Low THD

In case of large scale:

2. *Freq.* – *P* control
3. *U* – *Q* control
4. Fault ride-through

General Requirements & Specific Requirements

Input mission profiles for PV power application

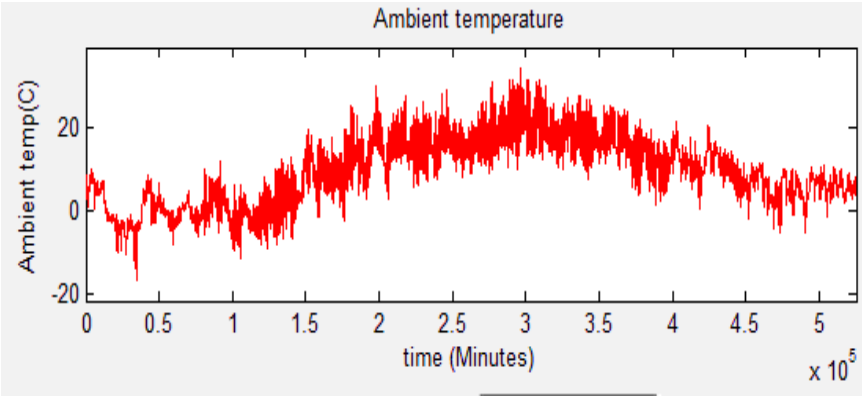

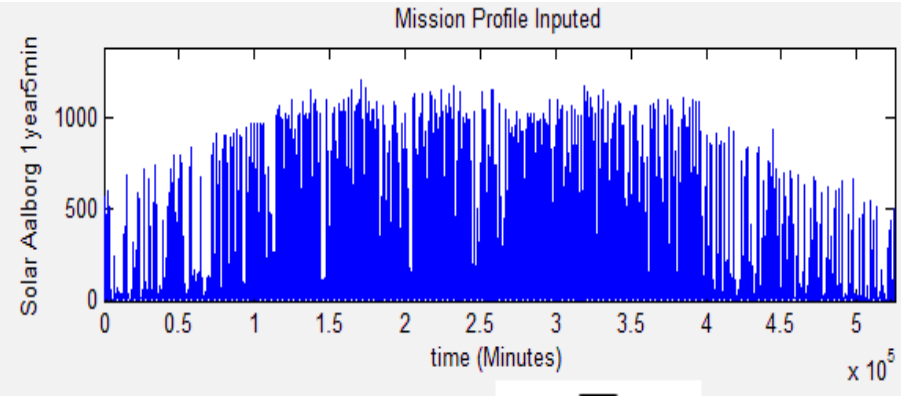

Ambient temperature

Solar irradiation

Mission profiles for PV panels at Aalborg University

- Highly variable solar irradiance
- Small power inertia to solar variation – quick response of PV panel.
- Small temperature inertia to ambient temp. variation – small case capacity.
- Temperature sensitive for the PV panel and power electronics.

Grid Codes for Photovoltaic Systems

Grid-connected PV systems ranging from several kWs to even a few MWs are being developed very fast and will soon take a major part of electricity generation in some areas. PV systems have to comply with much tougher requirements than ever before.

Requirements today

- Maximize active power capture (MPPT)
- Power quality issue
- Ancillary services for grid stability
- Communications
- High efficiency

In case of large-scale adoption of PV systems

- Reactive power control
- Frequency control
- Fault ride-through capability
- …

Cost of Energy (COE)

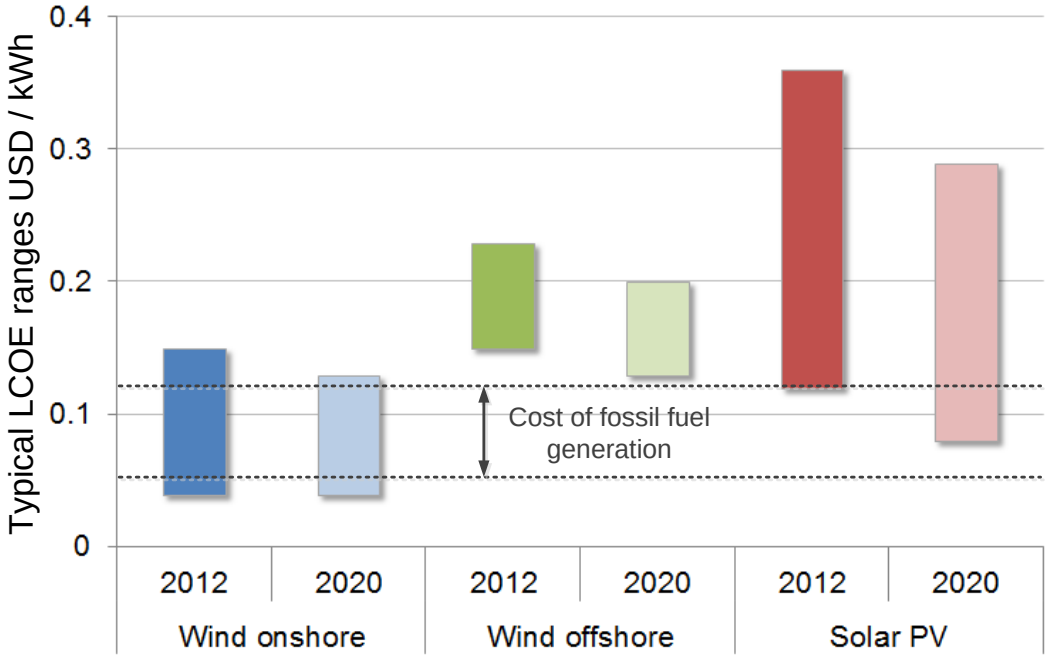

$$COE = \frac{C_{Cap} + C_{O\&M}}{E_{Annual}}$$

C_{Cap} – Capital cost
$C_{O\&M}$ – Operation and main. cost
E_{Annual} – Annual energy production

Determining factors for renewables
- Capacity growth
- Technology development

Approaches to Reduce Cost of Energy

$$COE = \frac{C_{Cap} + C_{O\&M}}{E_{Annual}}$$

C_{Cap} – Capital cost

$C_{O\&M}$ – Operation and main. cost

E_{Annual} – Annual energy production

Approaches	*Important and related factors*	*Potential*
Lower C_{Cap}	Production / Policy	+
Lower $C_{O\&M}$	Reliability / Design / Labor	++
Higher E_{annual}	Reliability / Capacity / Efficiency / Location	+++

Reliability is an efficient way to reduce COE – lower $C_{O\&M}$ & higher E_{Annual}

Typlical Lifetime Target in PE Applications

Applications	Typical design target of Lifetime
Aircraft	24 years (100,000 hours flight operation)
Automotive	15 years (10,000 operating hours, 300,000 km)
Industry motor drives	5-20 years (40,000 hours in at full load)
Railway	20-30 years (10 hours operation per day)
Wind turbines	20 years (18-24 hours operation per day) 100000 hours
Photovoltaic plants	20-30 years (12 hours per day) 100000 hours

Different O&M programs

Power converters for renewables application

PV Inverter System Configurations

Source: Infineon, SMA

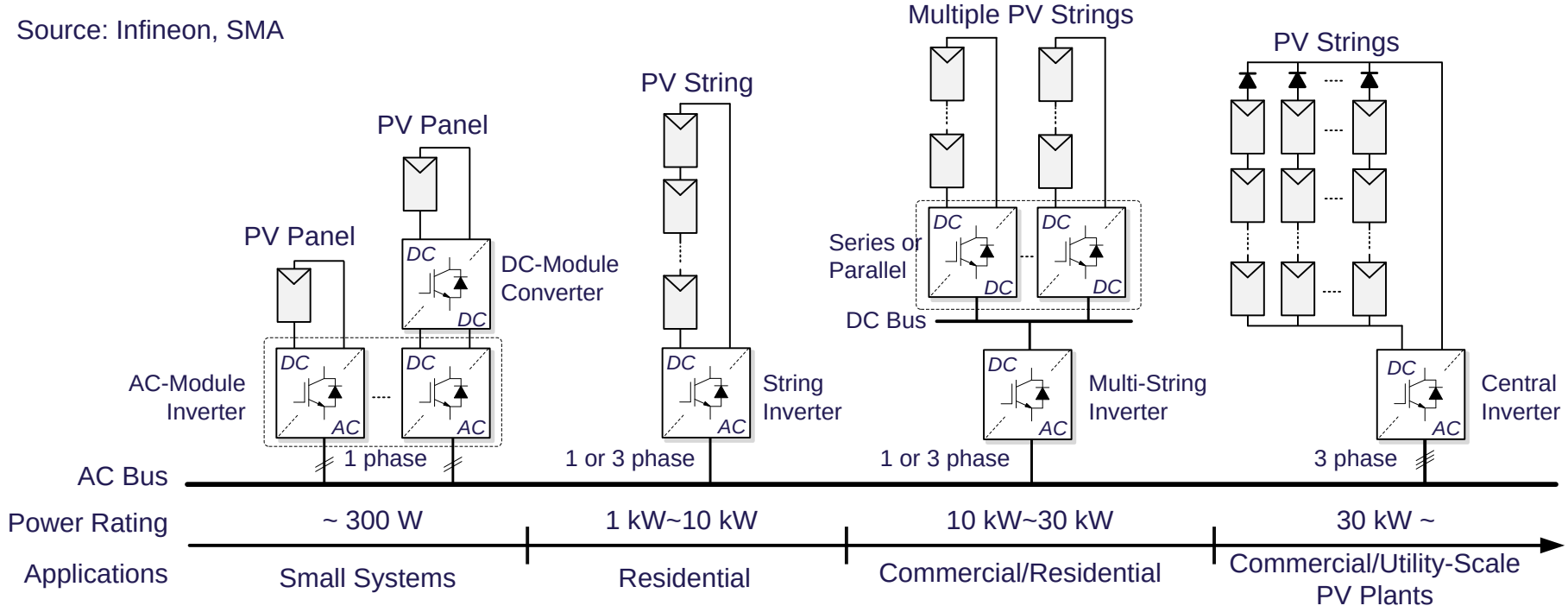

Module Converters | String Inverter | Multi-String Inverters | Central Inverters

Grid-Connection Configurations

Transformer-based grid-connection

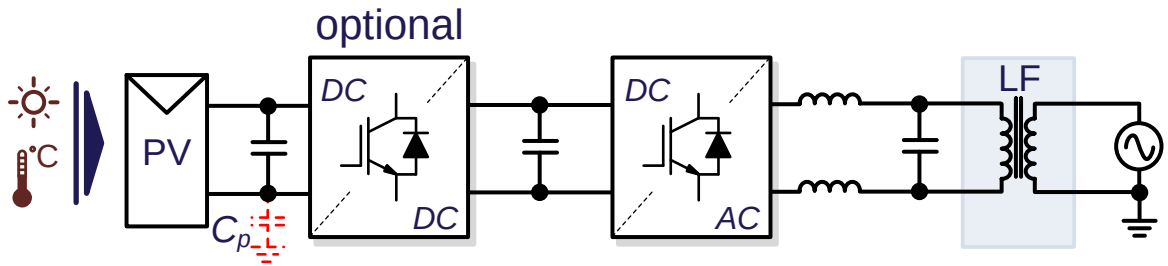

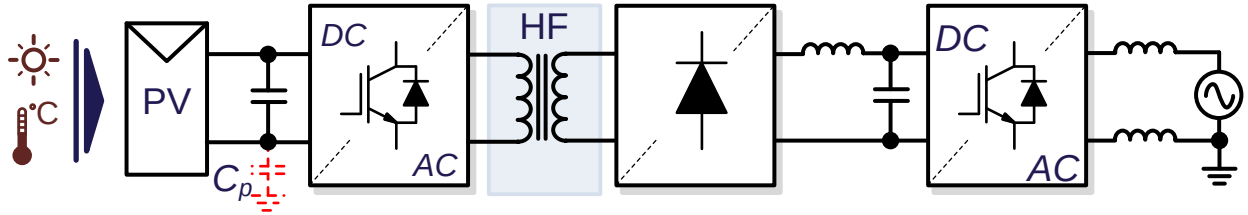

Transformerless grid-connection → Higher efficiency, Smaller volume

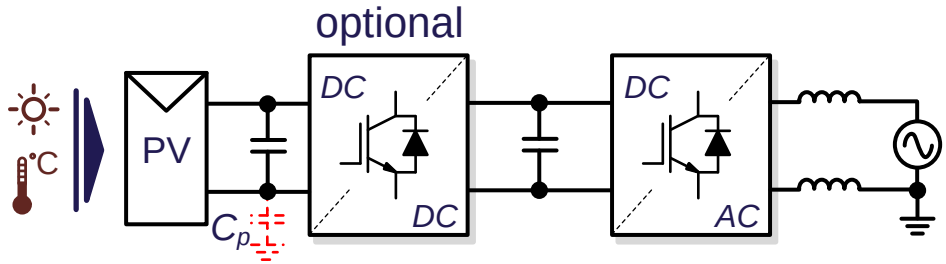

AC-Module PV Converters – Single-Stage

~ 300 W (several hundred watts)
High overall efficiency and High power desity.

Universal AC-module inverter

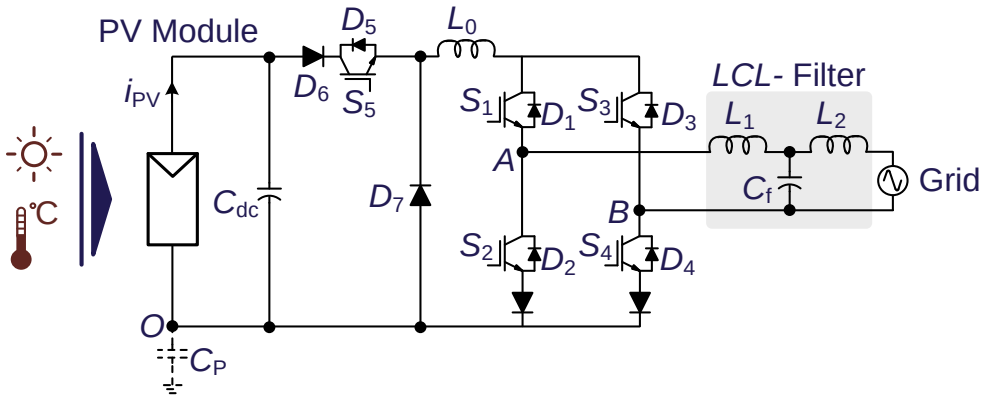

Buck-boost integrated full-bridge inverter

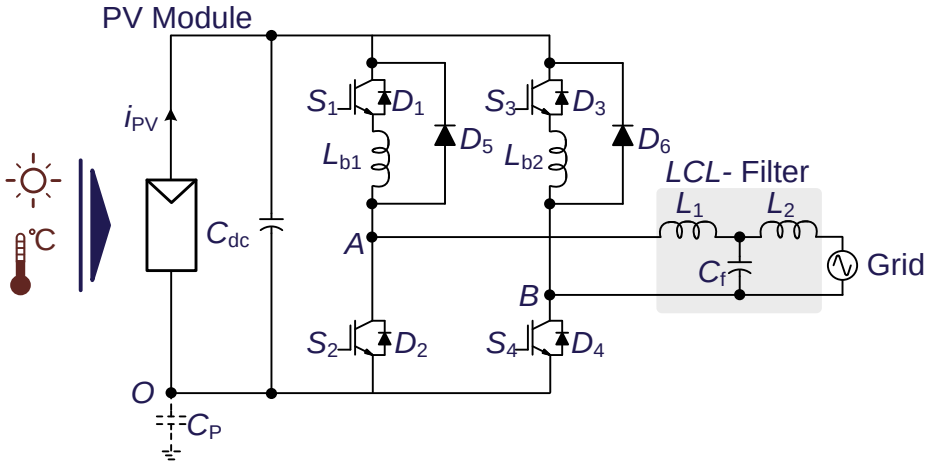

B.S. Prasad, S. Jain, and V. Agarwal, "Universal Single-Stage Grid-Connected Inverter," *IEEE Trans Energy Conversion*, 2008.
C. Wang "A novel single-stage full-bridge buck-boost inverter", *IEEE Trans. Power Electron.*, 2004.

String/Multi-String PV Inverters

1 kW ~ 30 kW (tens kilowatts)
High efficiency and also Emerging for modular configuration in medium and high power PV systems.

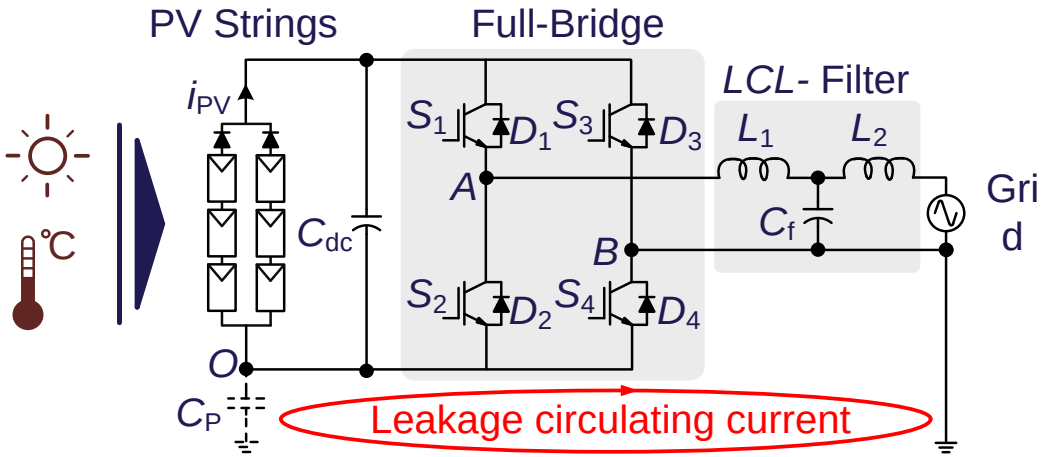

Bipolar Modulation is used:

- No common mode voltage → V_{PE} free for high frequency →low leakage current
- Max efficiency 96.5% due to reactive power exchange between the filter and C_{PV} during freewheeling and due to the fact that 2 switched are simultaneously switched every switching
- This topology is not special suited to transformerless PV inverter due to low efficiency!

Transformerless String Inverters

H5 Transformerless Inverter (SMA)

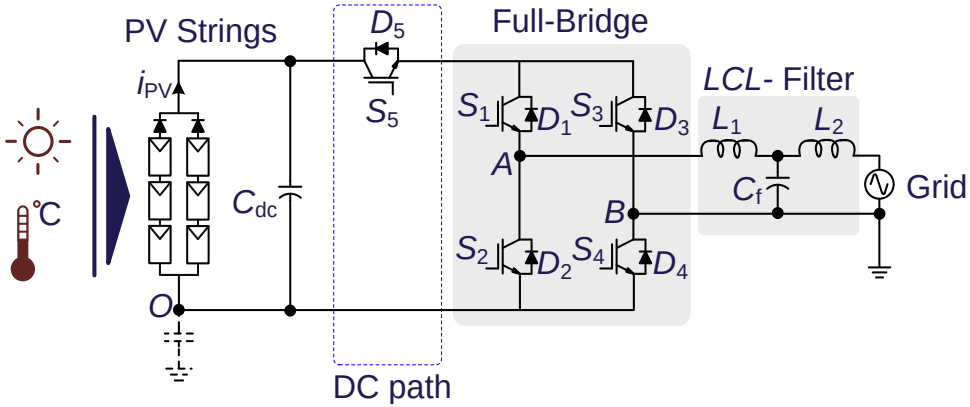

- Efficiency of up to 98%
- Low leakage current and EMI
- Unipolar voltage accross the filter, leading to low core losses

H6 Transformerless Inverter (Ingeteam)

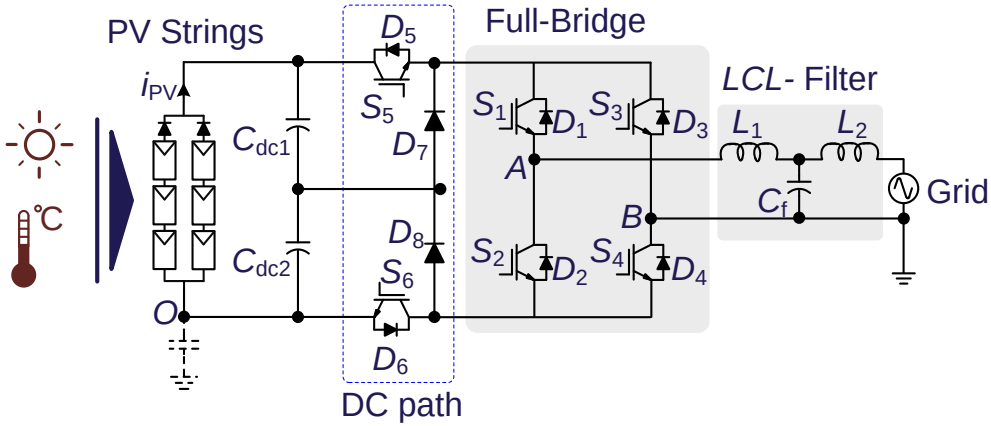

- High efficiency
- Low leakage current and EMI
- DC bypass switches rating: $V_{dc}/2$
- Unipolar voltage accross the filter

M. Victor, F. Greizer, S. Bremicker, and U. Hubler, U.S. Patent 20050286281 A1, Dec 29, 2005.
R. Gonzalez, J. Lopez, P. Sanchis, and L. Marroyo, "Transformerless inverter for single-phase photovoltaic systems," *IEEE Trans. Power Electron.*, 2007.

NPC Transformerless String Inverters

Neutral Point Clamped (NPC) converter for PV applications

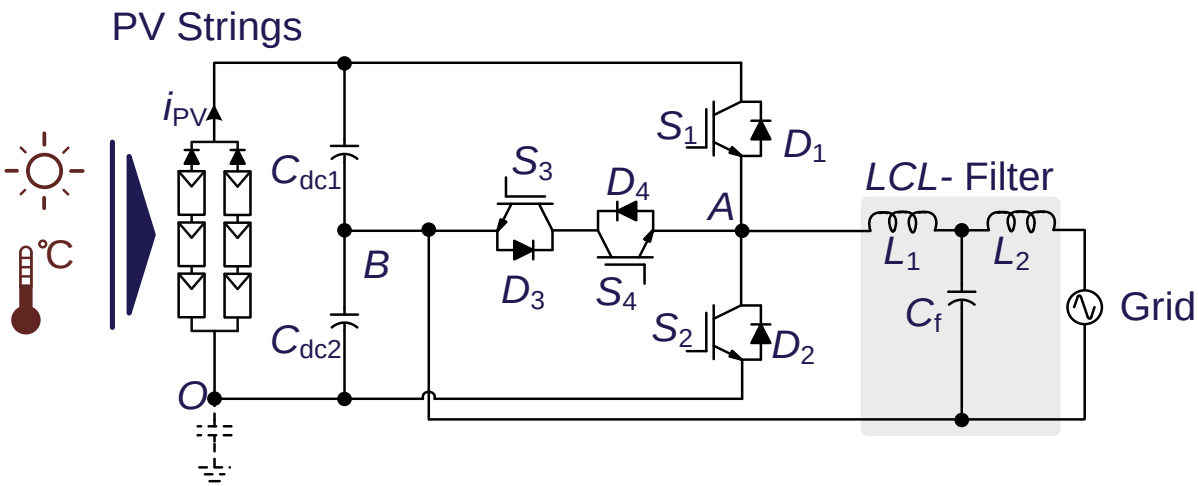

- Constant voltage-to-ground → Low leakage current, suitable for transformerless PV applications.
- High DC-link voltage (> twice of the grid peak voltage)

P. Knaup, International Patent Application, Publication Number: WO 2007/048420 A1, Issued May 3, 2007.

Central Inverters

~ 30 kW (tens kilowatts to megawatts)

Very high power capacity.

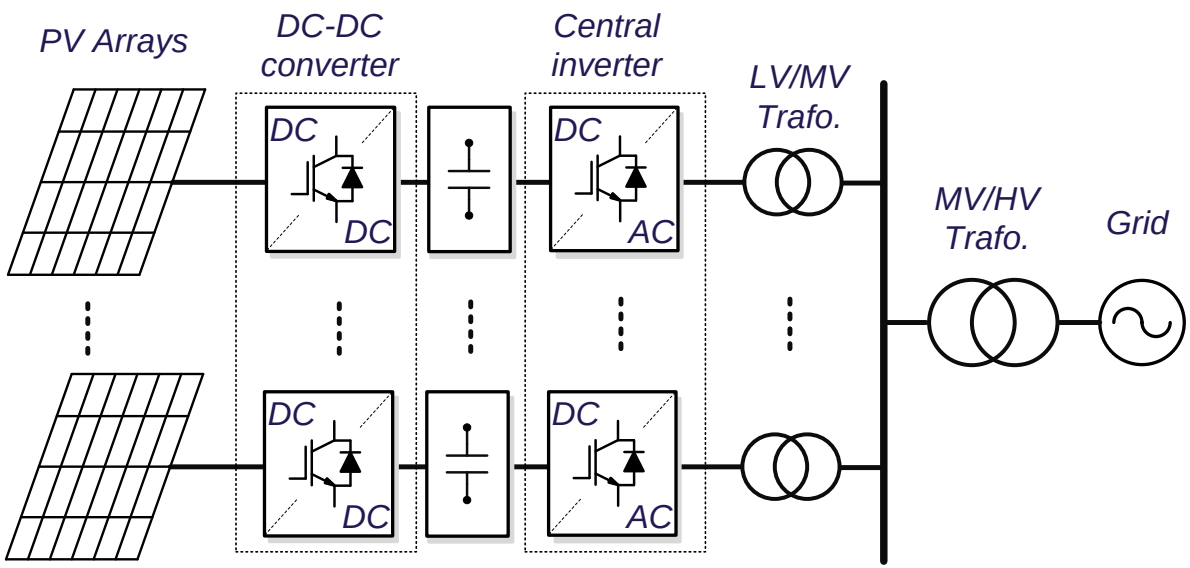

- Large PV power plants (e.g. 750 kW by SMA), rated over tens and even hundreds of MW, adopt many central inverters with the power rating of up to 900 kW.
- DC-DC converters are also used before the central inverters.
- DC voltage become up to 1500 V
- Similar to wind turbine applications → NPC topology might be a promising solution.

Wind turbine concept and configurations

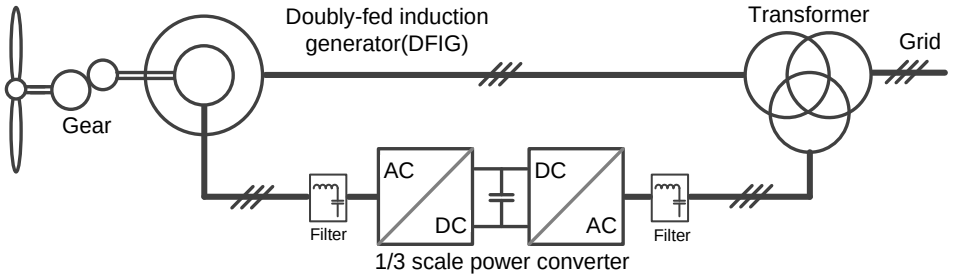

Partial scale converter with DFIG

- Variable pitch – variable speed
- Doubly Fed Induction Generator
- Gear box and slip rings
- ±30% slip variation around synchronous speed
- Power converter (back to back/ direct AC/AC) in rotor circuit
- ✓ State-of-the-art solutions

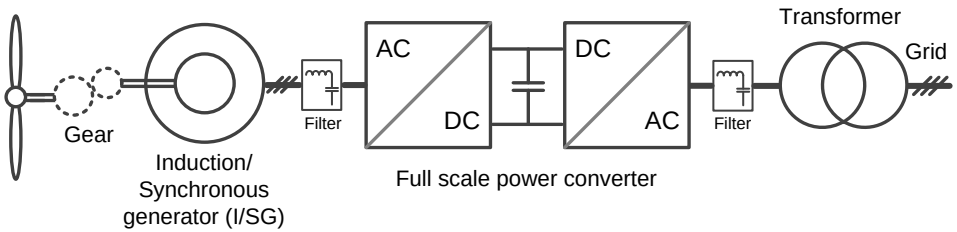

Full scale converter with SG/IG

- Variable pitch – variable speed
- Generator
  Synchronous generator
  Permanent magnet generator
  Squirrel-cage induction generator
- With/without gearbox
- Power converter
  Diode rectifier + boost DC/DC + inverter
  Back-to-back converter
  Direct AC/AC (e.g. matrix, cycloconverters)
- ✓ State-of-the-art and future solutions

Converter topologies under low voltage (<690V)

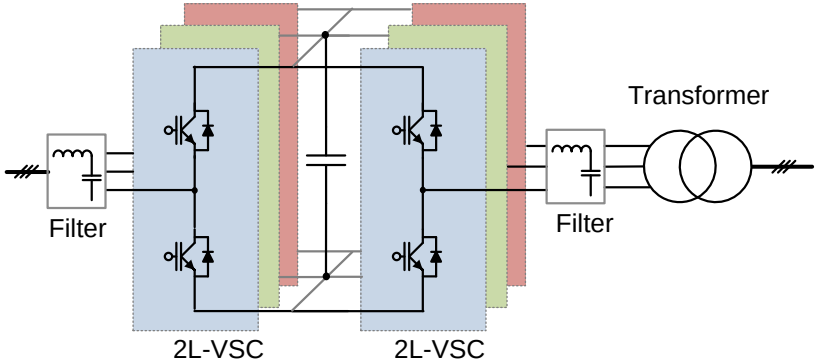

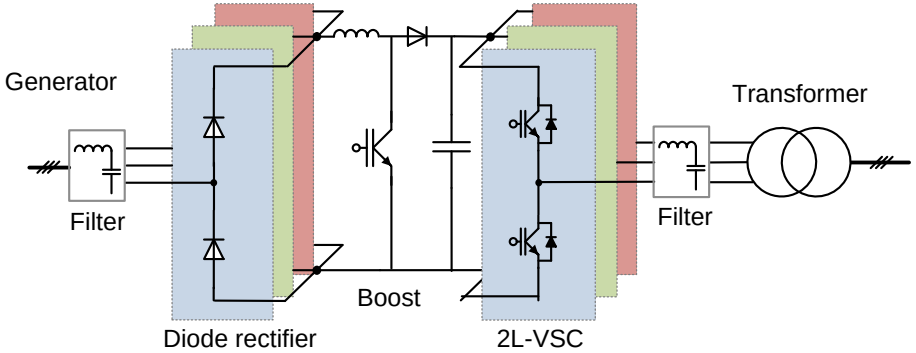

Back-to-back two-level voltage source converter

- Proven technology
- Standard power devices (integrated)
- Decoupling between grid and generator (compensation for non-symmetry and other power quality issues)

- High dv/dt and bulky filter
- Need for major energy-storage in DC-link
- High power losses at high power (switching and conduction losses) → low efficiency

Diode rectifier + boost DC/DC + 2L-VSC

- Suitable for PMSG or SG.
- Lower cost

- Low THD on generator, low frequency torque pulsations in drive train.
- Challenge to design boost converter at MW.

Solution to extend the power capacity

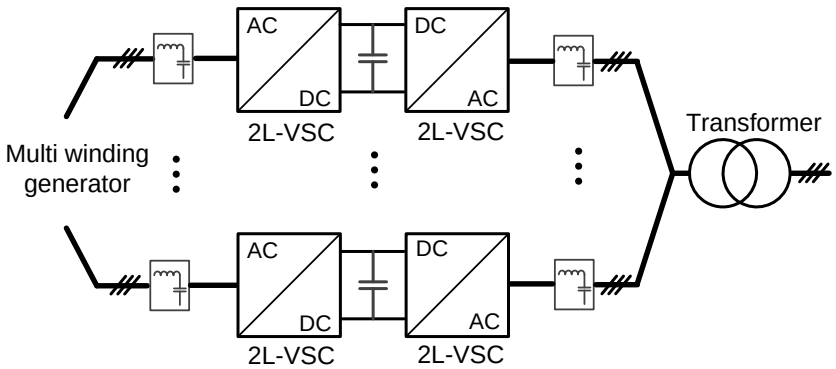

Variant 1 with multi-winding generator.

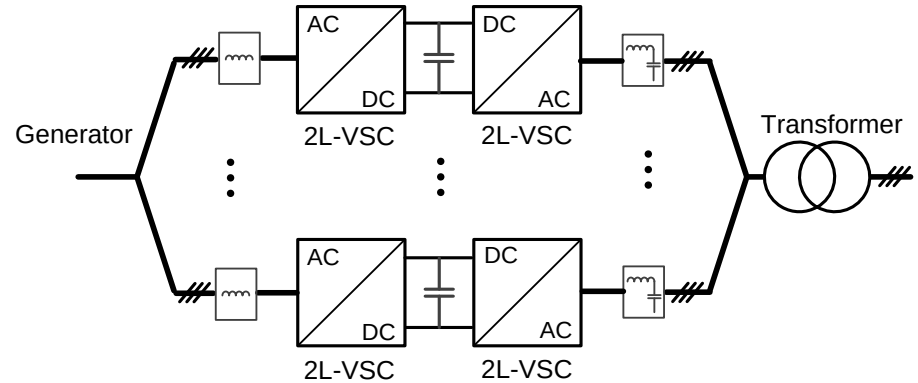

Variant 2 with normal winding generator

Parallel converter to extend the power capacity

- State-of-the-art solution in industry (>3MW)
- Standard and proven converter cells (2L VSC)
- Redundant and modular characteristics.

- Circulating current under common DC link with extra filter or special PWM

Multi-level converter topology – 3L-NPC

Three-level NPC

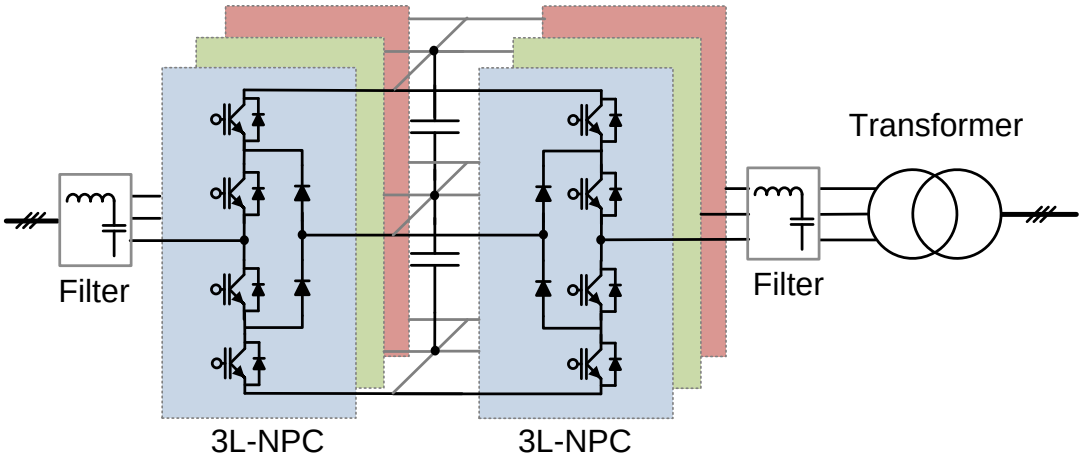

- Most commerciallized multi-level topology.
- More output voltage levels → Smaller filter
- Higher voltage, and larger output power with the same device rating
- Possible to be configured in parallel to extend power capacity.

- Unequal losses on the inner and outer power devices → derated converter power capacity
- Mid-point balance of DC link – under various operating conditions.

Multi-level converter topology - H-bridge back-to-back

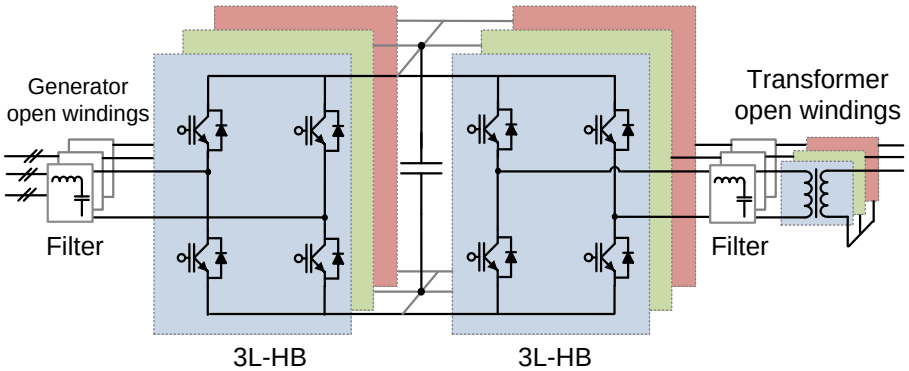

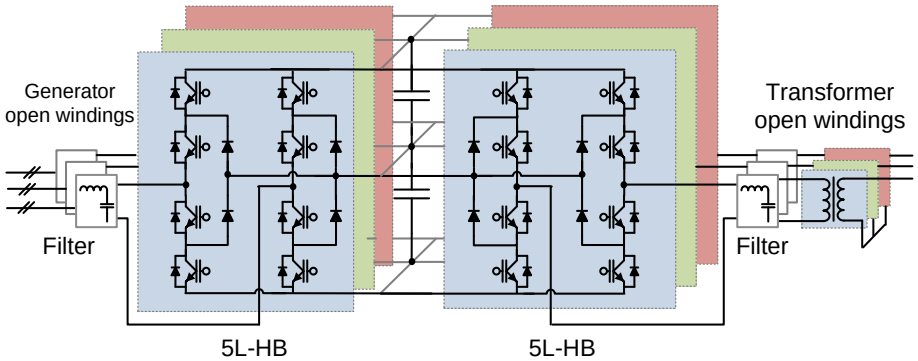

- More equal loss distribution → higher output power
- More output voltage levels compared to 2L VSC
- Redundancy if 1 or 2 phases failed.
- Higher controllability coming from zero sequence.

- Open windings for generator and transformer – higher cost
- Hard to be configured in parallel to extend power capacity.

Multi-cells converter topologies in future solution

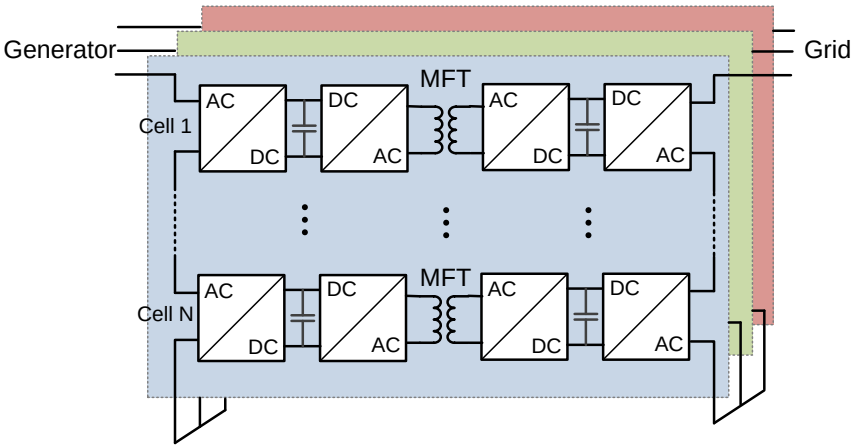

CHB with medium frequency transformer

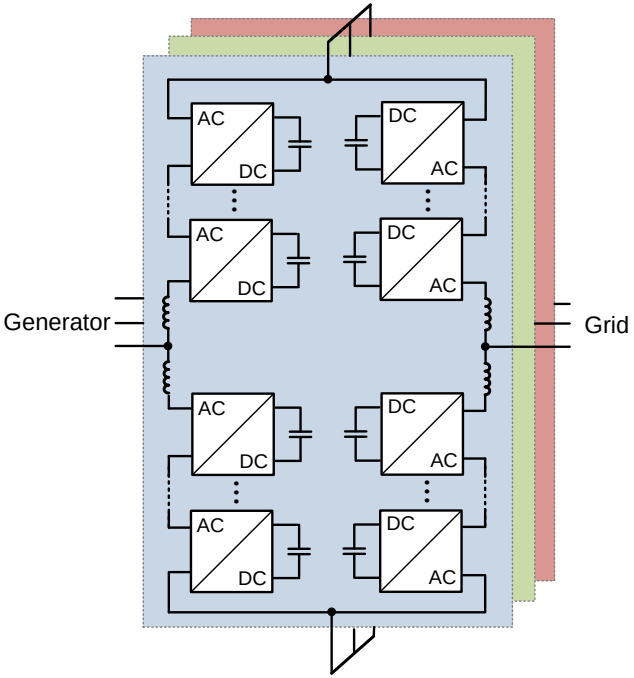

Modular multi level converter (MMC)

- Reduced transformer size for CHB-MFT
- Easily scalable power and voltage level.
- High redundancy and modularity.
- Filter-less design, direct connection to distribution grid.

- Significantly increased components counts
- Still very high cost-of-energy.

Potential power devices for wind power

	IGBT module	IGBT Press-pack	IGCT Press-pack	SiC-MOSFET module
Power Density	Low	High	High	Low
Reliability	Moderate	High	High	Unknown
Cost		High	High	High
Failure mode	Open circuit	Short circuit	Short circuit	Open circuit
Easy maintenance	+	-	-	+
Insulation of heat sink	+	-	-	+
Snubber requirement	-	-	+	-
Thermal resistance	Large	Small	Small	Moderate
Switching loss	Low	Moderate	Moderate	Low
Conduction loss	Moderate	Moderate	Moderate	Large
Gate driver	Moderate	Moderate	Large	Small
Major manufacturers	Infineon, Semikron, Mitsubishi, ABB	Westcode, ABB	ABB	Cree, Rohm, Mitsubishi
Voltage ratings	1.7 kV-6.5 kV	2.5 kV / 4.5 kV	4.5 kV / 6.5 kV	1.2 kV / 10 kV
Max. current ratings	1.5 kV - 750 A	2.3 kA / 2.4 kA	3.6 kA / 3.8 kA	180 A / 20 A

Controls for renewable energy systems

General Control Structure for PV Systems

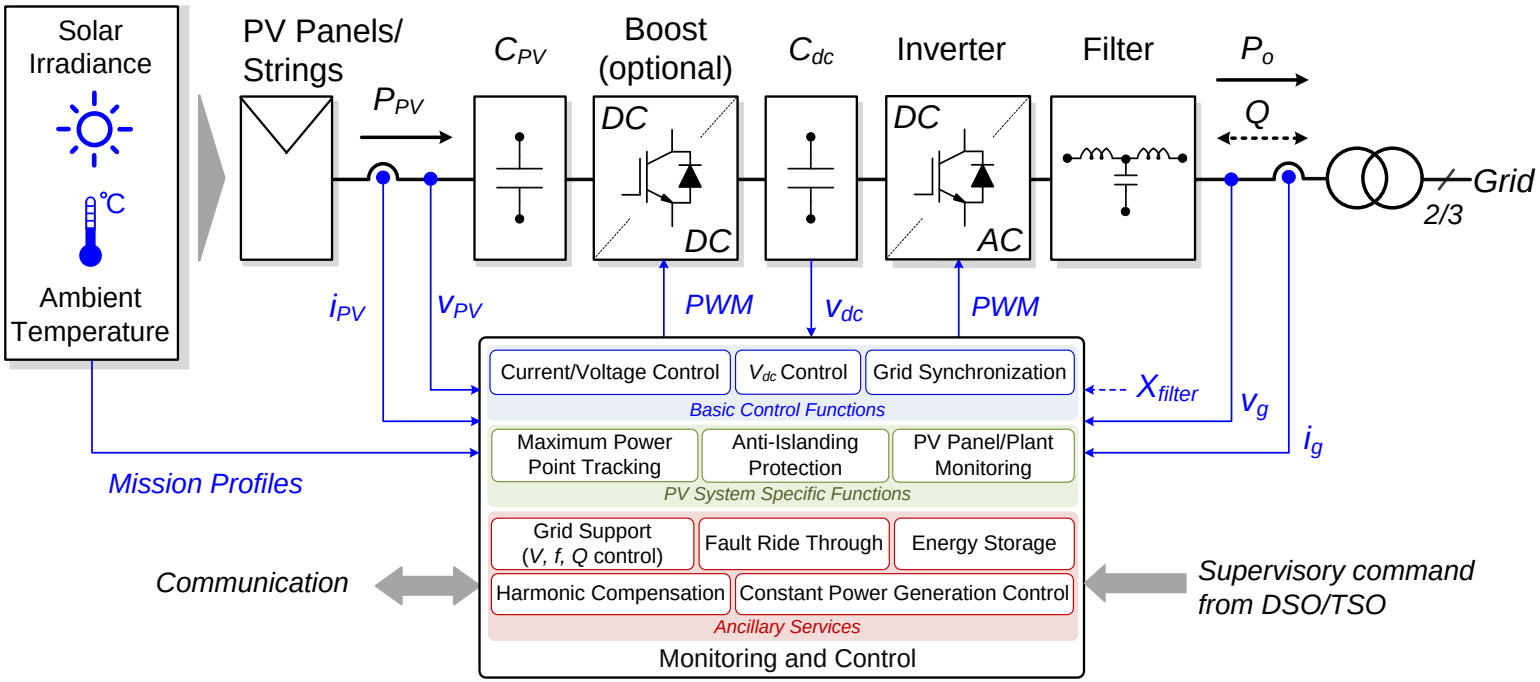

Basic functions – all grid-tied inverters

- Grid current control
- DC voltage control
- Grid synchronization

PV specific functions – common for PV inverters

- Maximum power point tracking – MPPT
- Anti-Islanding (VDE0126, IEEE1574, etc.)
- Grid monitoring
- Plant monitoring
- Sun tracking (mechanical MPPT)

Ancillary support – in effectiveness

- Voltage control
- Fault ride-through
- Power quality
- …

Maximum Power Point Tracking (MPPT)

Role of MPPT - namely to maximize the energy harvesting

- PV array characteristic is non-linear → Maximum Power Point (MPP)
- MPP is weather-dependent → Maximum Power Point Tracking (MPPT)

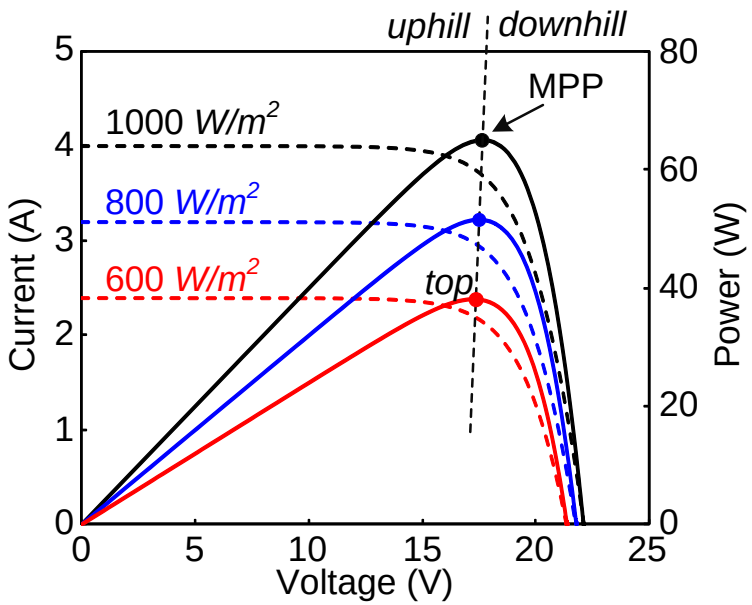

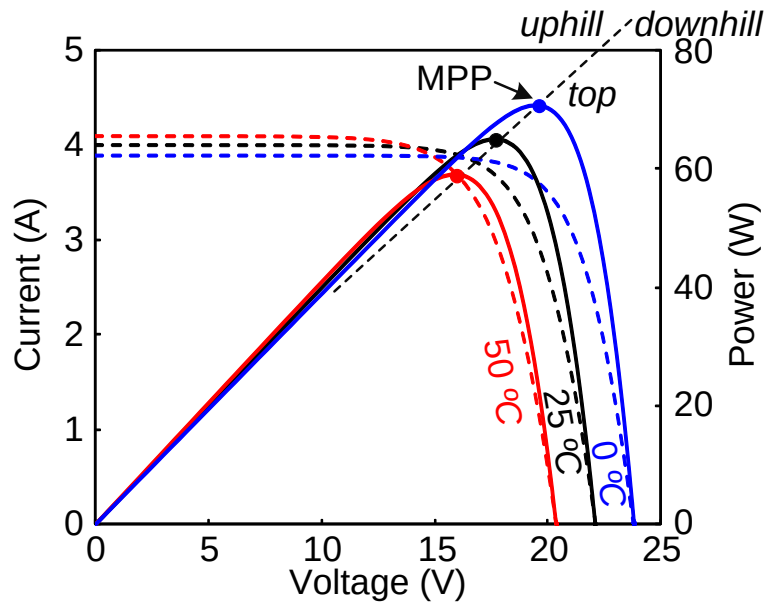

MPPT Algorithms

MPPT Methods	Advantages	Disadvanteges
Perturb & Observe (P&O) / Incremental Conductance	• Simple • Low computation • Generic	• Tradeoff beteween speed and accuracy • Goes to the wrong way under fast changing conditions
Constant Voltage (CV)	• Much simple • No ripple due to perturbation	• Energy is wasted during Voc measurement • Inaccuracy
Short-Current Pulse (SCP, i.e., constant current)	• Simple • No ripple due to perturbation	• Extra swith needed for short-circuiting • Inaccuracy
Ripple Correlation Control	• Ripple amplitude provides the MPP information • Noneed for perturbation	• Tradeoff between efficiency loss due to MPPT or to the ripple

P&O – the most commonly used MPPT algorithm!

Example of MPPT Control

Experiments of P&O on a 3-kW double-stage system:

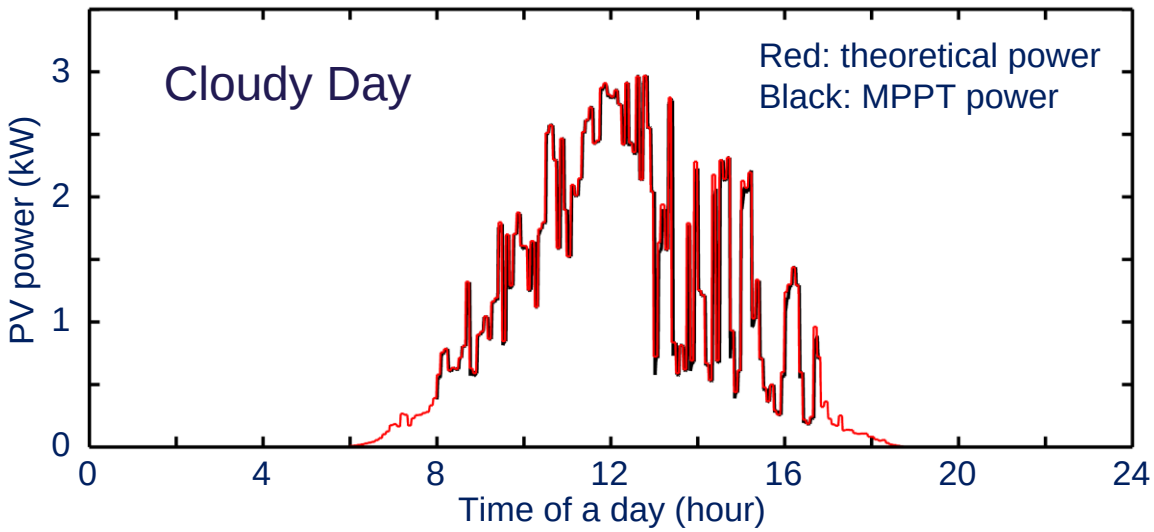

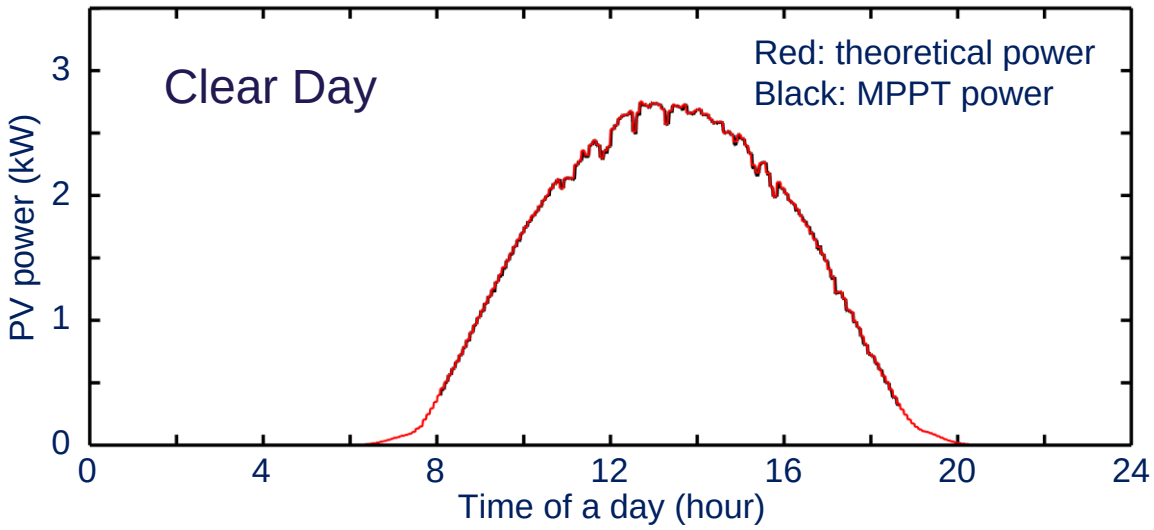

Constant Power Generation (CPG) Concept

CPG – one of the Active Power Control (APC) functions

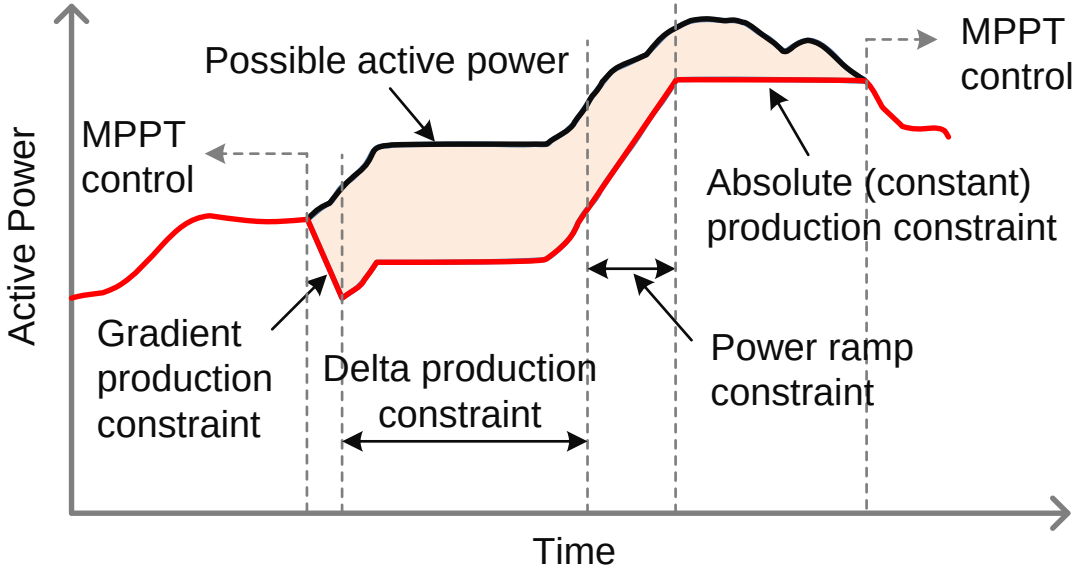

Extend the CPG function for WTS in Denmark to wide-scale PV applications?

Y. Yang, F. Blaabjerg, and H. Wang, "Constant power generation of photovoltaic systems considering the distributed grid capacity," in *Proc. of APEC*, pp. 379-385, 16-20 Mar. 2014.

Constant Power Generation (CPG) Concept

Implementation of CPG in single-phase PV systems

- Energy “reservoir” – storage elements
- Power management/balancing control
- Modifying the MPPT

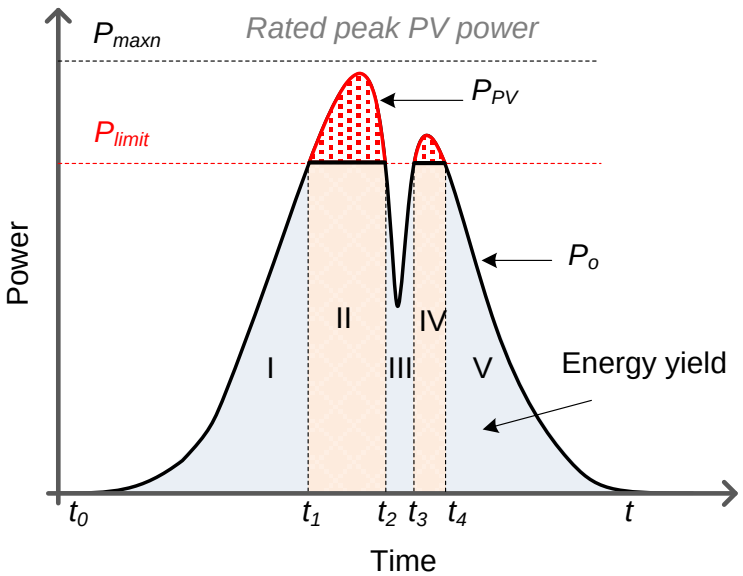

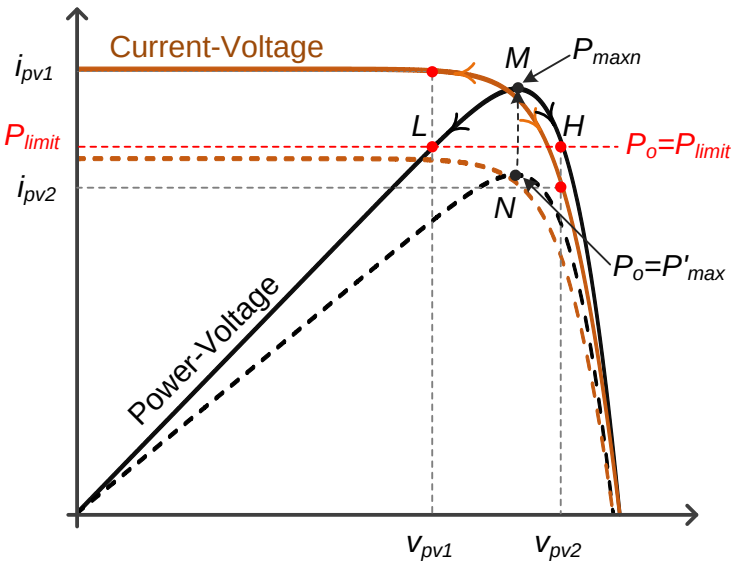

Constant Power Generation (CPG) Concept

Operation examples of CPG control (experiments)

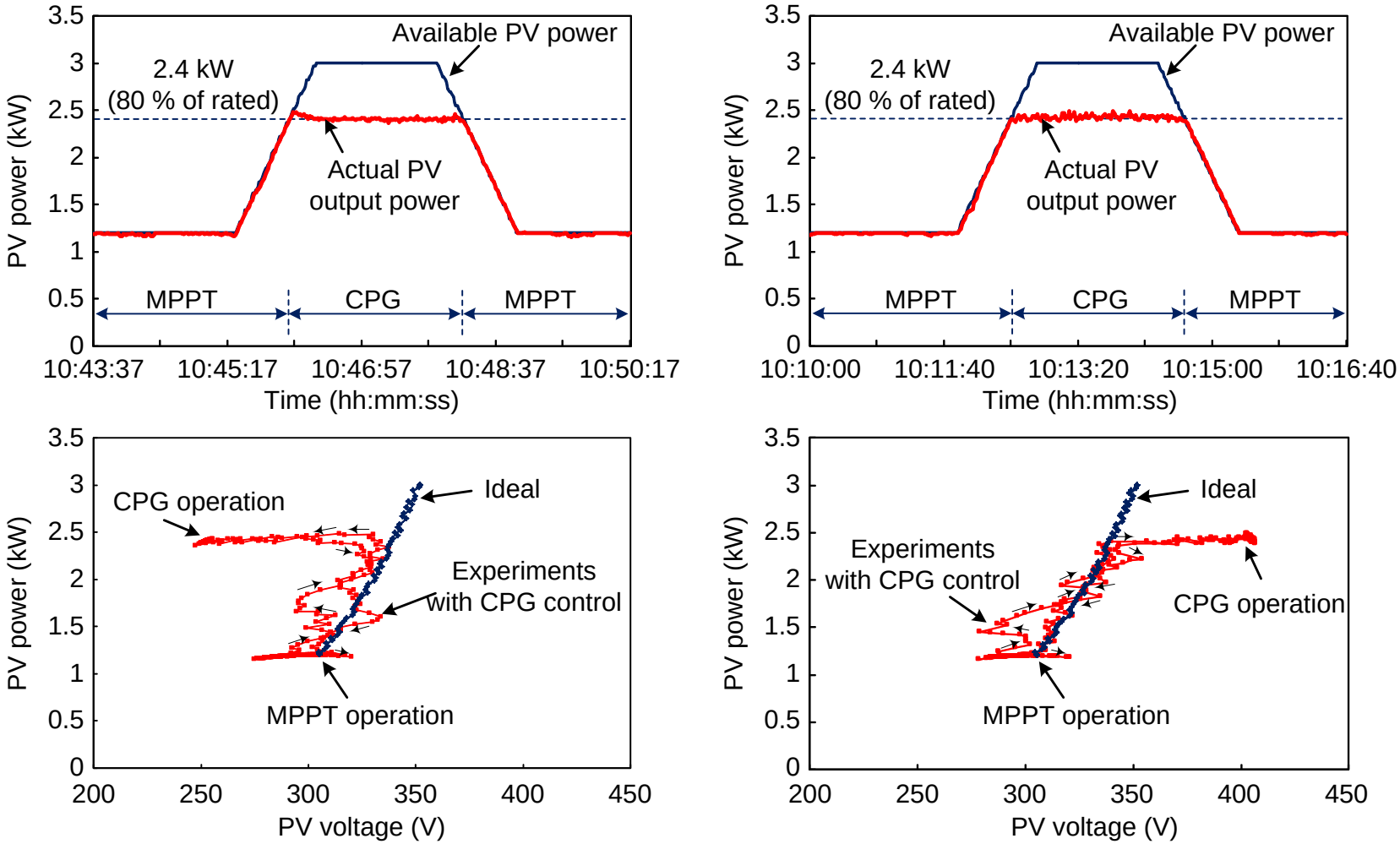

More Stringent Requirements

Beyond the fundamentals, more stringent are coming:

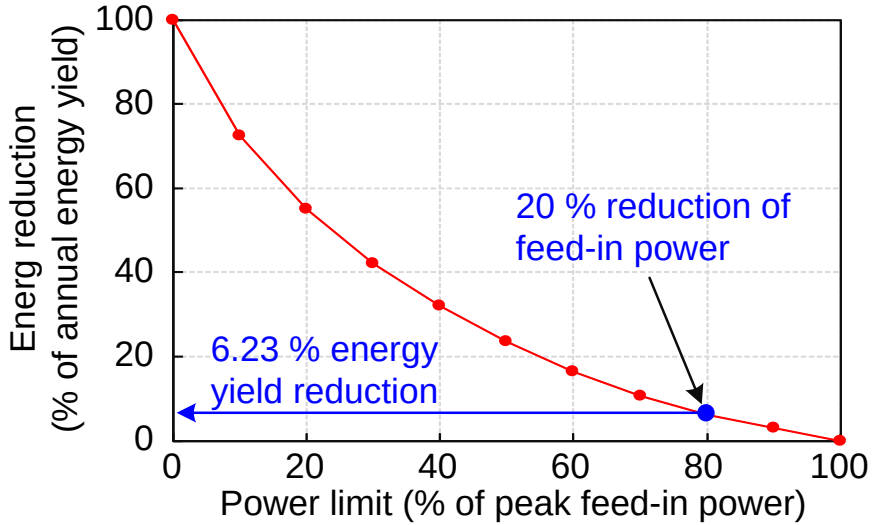

PV system with limited maximum feed-in power control.

(already in effectiveness in some countries)

- New demands for grid integrations, communications, power flow control, and protection are needed to accept more renewables.
- Power electronic converters are important in this technology transformation.

General Control structure for Wind Turbine System

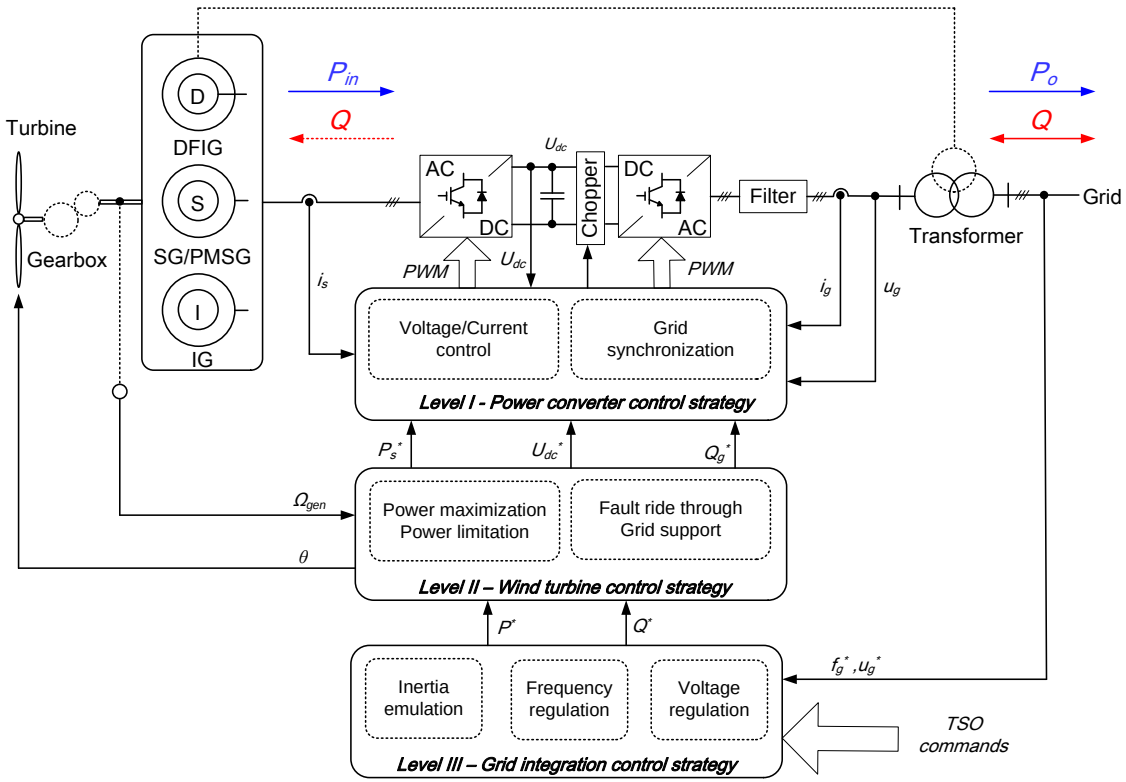

Level I – Power converter

- ✓ Grid synchronization
- ✓ Converter current control
- ✓ DC voltage control

Level II – Wind turbine

- ✓ MPPT
- ✓ Turbine pitch control
- ✓ DC Chopper

Level III – Grid integration

- ✓ Voltage regulation
- ✓ Frequency regulation
- ✓ Power quality

MPPT Control for two wind turbine systems

- DFIG system

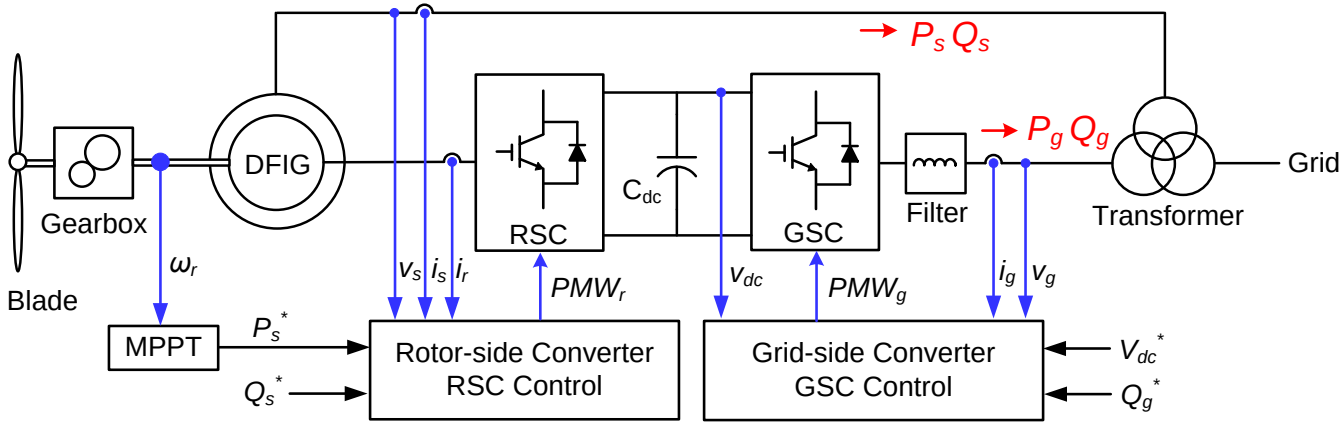

- PMSG system

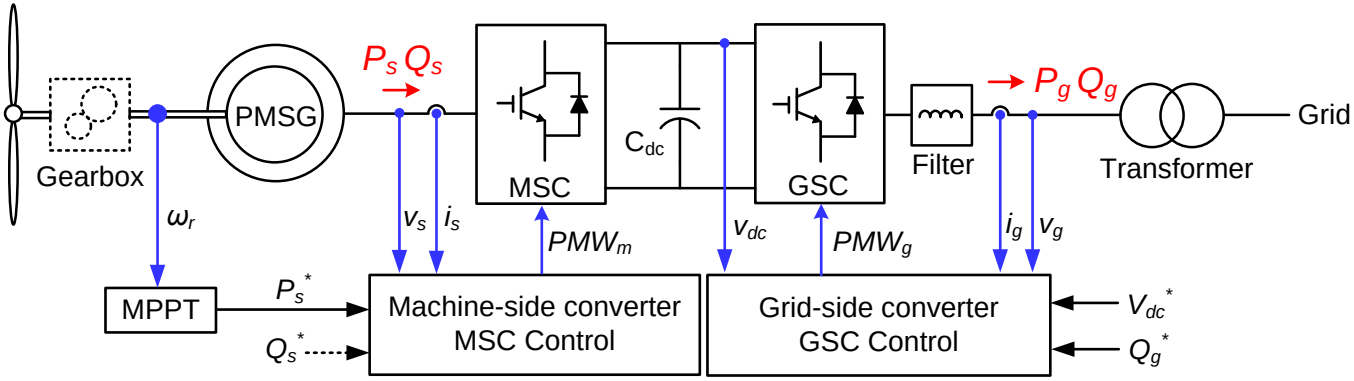

Summary

Summary of presentation

- Cost of Energy more down incl low failure-rate
- Reliability important topic for future
- Control of power electronic system emerging
- Stability in solid state based power grid as well as conventional power system
- More stringent grid codes will still be developed
- Still new technology in renewables (WBG etc..)
- New power converters with new power devices

- And much more..

Acknowledgment

Dr. Yongheng Yang, Dr. Xiongfei Wang and Dr. Dao Zhou, Dr. Ke Ma

from Department of Energy Technology
Aalborg University

Look at

www.et.aau.dk
www.corpe.et.aau.dk
www.harmony.et.aau.dk

Thank you for your attention!

Aalborg University
Department of Energy Technology
Aalborg, Denmark

AALBORG UNIVERSITY
DENMARK

PCIM
EUROPE

References

1. M. Liserre, R. Cardenas, M. Molinas, J. Rodriguez, ”Overview of Multi-MW wind turbines and wind parks”, IEEE Trans. on Industrial Electronics, Vol. 58, No. 4, pp. 1081-1095, April 2011.
2. REN21 - Renewables 2014 Global Status Report, June, 2014. (Available: http://www.ren21.net)
3. Z. Chen, J.M. Guerrero, F. Blaabjerg, "A Review of the State of the Art of Power Electronics for Wind Turbines," IEEE Trans. on Power Electronics, vol.24, No.8, pp.1859-1875, Aug 2009.
4. F. Blaabjerg, Z. Chen, S.B. Kjaer, “Power Electronics as Efficient Interface in Dispersed Power Generation Systems”, IEEE Trans. on Power Electronics, Vol. 19, no. 4, pp. 1184-1194, 2004.
5. A.D. Hansen, F. Iov, F. Blaabjerg, L.H. Hansen, “Review of contemporary wind turbine concepts and their market penetration,” Journal of Wind Engineering, Vol. 28, No. 3, pp. 247-263, 2004.
6. M.P. Kazmierkowski, R. Krishnan, F. Blaabjerg, Control in Power Electronics-Selected problems, Academic Press, 2002. ISBN 0-12-402772-5.
7. F. Blaabjerg, M. Liserre, K. Ma, “Power Electronics Converters for Wind Turbine Systems,” IEEE Trans. on Industry Application, vol. 48, no. 2, pp. 708-719, 2012.
8. F. Blaabjerg, K. Ma, “Future on power electronics for wind turbine systems,” *IEEE Journal of Emerging and Selected Topics in Power Electronics*, vol. 1, no. 3, pp. 139-152, 2013.
9. H. Wang, M. Liserre, F. Blaabjerg, P. P. Rimmen, J. B. Jacobsen, T. Kvisgaard, J. Landkildehus, "Transitioning to physics-of-failure as a reliability driver in power electronics," IEEE Journal of Emerging and Selected Topics in Power Electronics, Vol. 2, No. 1, pp.97-114, 2014.
10. H. Wang, M. Liserre, and F. Blaabjerg, “Toward reliable power electronics - challenges, design tools and opportunities,” IEEE Industrial Electronics Magazine, vol.7, no. 2, pp. 17-26, Jun. 2013.
11. S. B. Kjaer, J. K. Pedersen, and F. Blaabjerg, “A review of single-phase grid connected inverters for photovoltaic modules,” IEEE Trans. on Ind. Appl., vol. 41, no. 5, pp. 1292-1306, Sep. 2005.
12. K. Ma, F. Blaabjerg, and M. Liserre, “Thermal analysis of multilevel grid side converters for 10 MW wind turbines under low voltage ride through”, IEEE Trans. Ind. Appl., vol. 49, no. 2, pp. 909-921, Mar./Apr. 2013.
13. K. Ma, M. Liserre, and F. Blaabjerg, “Reactive power influence on the thermal cycling of multi-MW wind power inverter”, IEEE Trans. on Ind. Appl., vol. 49, no. 2, pp. 922-930, Mar./Apr. 2013.
14. C. Busca, R. Teodorescu, F. Blaabjerg, S. Munk-Nielsen, L. Helle, T. Abeyasekera, and P. Rodriguez, “An overview of the reliability prediction related aspects of high power IGBTs in wind power applications,” Journal of Microelectronics Reliability, vol. 51, no. 9-11, pp. 1903-1907, 2011.
15. E. Koutroulis and F. Blaabjerg, “Design optimization of transformerless grid-connected PV inverters including reliability,” IEEE Trans. on Power Electronics, vol. 28, no. 1, pp. 325-335, Jan. 2013.
16. K. B. Pedersen and K. Pedersen, “Bond wire lift-off in IGBT modules due to thermo-mechanical induced stress,” in Proc. of PEDG’ 2012, pp. 519 - 526, 2012.

References

17. S. Yang, D. Xiang, A. Bryant, P. Mawby, L. Ran and P. Tavner, “Condition monitoring for device reliability in power electronic converters: a review,” IEEE Trans. Power Electron., vol. 25, no. 11, pp. 2734-2752, Nov., 2010.
18. M. Pecht and J. Gu, “Physics-of-failure-based prognostics for electronic products,” Trans. of the Institute of Measurement and Control , vol. 31, no. 3-4, pp. 309-322, Mar./Apr., 2009.
19. Moore, L. M. and H. N. Post, “Five years of operating experience at a large, utility-scale photovoltaic generating plant,” Progress in Photovoltaics: Research and Applications 16(3): 249-259, 2008.
20. Reliawind, Report on Wind Turbine Reliability Profiles – Field Data Reliability Analysis, 2011.
21. D. L. Blackburn, “Temperature measurements of semiconductor devices - a review,” in Proc. IEEE Semiconductor Thermal Measurement and Management Symposium, pp. 70-80, 2004.
22. A. Bryant, S. Yang, P. Mawby, D. Xiang, Li Ran, P. Tavner, P. Palmer, "Investigation Into IGBT dV/dt During Turn-Off and Its Temperature Dependence", IEEE Trans. Power Electron., vol.26, no.10, pp.3019-3031, Oct. 2011.
23. Z. Xu, D. Jiang, M. Li, P. Ning, F.F. Wang, Z. Liang, "Development of Si IGBT Phase-Leg Modules for Operation at 200 °C in Hybrid Electric Vehicle Applications", IEEE Trans. Power Electron., vol.28, no.12, pp.5557-5567, Dec. 2013.
24. H. Chen, V. Pickert, D. J. Atkinson, and L. S. Pritchard, “On-line monitoring of the MOSFET device junction temperature by computation of the threshold voltage,” in Proc. 3rd IET Int. Conf. Power Electron. Mach. Drives, Dublin, Ireland, Apr. 4–6, 2006, pp. 440–444.
25. D. Barlini, M. Ciappa, M. Mermet-Guyennet, and W. Fichtner, “Measurement of the transient junction temperature in MOSFET devices under operating conditions,” Microelectron. Reliabil., vol. 47, pp. 1707–1712, 2007.
26. A. Isidori, F. M. Rossi, F. Blaabjerg, and K. Ma, "Thermal loading and reliability of 10 MW multilevel wind power converter at different wind roughness classes", IEEE Trans. on Industry Applications, vol. 50, no. 1, pp. 484-494, 2014.
27. K. B. Pedersen, D. Benning, P. K. Kristensen, V.Popok, and K. Pedersen, "Interface structure and strength of ultrasonically wedge bonded heavy aluminium wires in Si-based power modules," Journal of Materials Science: Materials in Electronics, Apr 2014.
28. K. Ma, A. S. Bahman, S. M. Beczkowski, F. Blaabjerg, “Complete Loss and Thermal Model of Power Semiconductors Including Device Rating Information,” IEEE Trans. on Power Electronics, Vol. 30, No. 5, pp. 2556-2569, May 2015.
29. K. Ma, W. Chen, M. Liserre, F. Blaabjerg, “Power Controllability of Three-phase Converter with Unbalanced AC Source”, IEEE Trans. on Power Electronics, Vol. 30, No. 3, pp. 1591-1604, Mar 2014.
30. K. Ma, M. Liserre, F. Blaabjerg, T. Kerekes, “Thermal Loading and Lifetime Estimation for Power Device Considering Mission Profiles in Wind Power Converter,” IEEE Trans. on Power Electronics, Vol. 30, No. 2, pp. 590-602, 2015.
31. U. M. Choi, K. B. Lee, F. Blaabjerg, "Diagnosis and tolerant strategy of an open-switch fault for T-type three-level inverter systems," IEEE Transactions on Industry Applications, vol. 50, no. 1, pp. 495-508, 2014.
32. Y. Yang, Huai Wang, Frede Blaabjerg, and Tamas Kerekes, “A hybrid power control concept for PV inverters with reduced thermal loading,” IEEE Trans. Power Electron., Vol.29, No. 12, pp.6271-6275, 2014.

References

33. M. Liserre, F. Blaabjerg, and S. Hansen, “Design and Control of an LCL-Filter-Based Three-Phase Active Rectifier,” IEEE Trans. Ind. Appl., vol. 41, no. 5, pp. 1281–1291, Sep. 2005.
34. L. Wei and R.A. Lukaszewski, “Optimization of the Main Inductor in a LCL Filter for Three Phase Active Rectifier”, *42nd IAS Annual Meeting. Conference Record of the 2007 IEEE Industry Applications Conference, 2007*, vol., no., pp.1816,1822, 23-27 Sept. 2007
35. J. Muhlethaler, M. Schweizer, R. Blattmann, J. W. Kolar, and A. Ecklebe, “Optimal Design of LCL Harmonic Filters for Three-Phase PFC Rectifiers,” *IEEE Trans. Power Electron.*, vol. 28, no. 7, pp. 3114–3125, Jul. 2013.
36. IEEE Application Guide for IEEE Std 1547™, IEEE Standard for Interconnecting Distributed Resources with Electric Power Systems (2008)
37. “*Generating plants connected to the medium voltage network - Guideline for generating plants connection to and parallel operation with the medium voltage network*”, BDEW Bundesverband der Energie- und Wasserwirtschaft e.V. Reinhardtstraße 32, 10117 Berlin (2008)
38. VDE-AR-N 4105: Generators connected to the low-voltage distribution network - Technical requirements for the connection to and parallel operation with low-voltage distribution network (2010)
39. R. D. Middlebrook, “Design Techniques for Preventing Input-Filter Oscillations in Switched-Mode Regulators,” *Proc. Power Convers. Conf., 1978, pp. A3.1–A3.16.*
40. Beres, R.N.; Xiongfei Wang; Blaabjerg, F.; Bak, C.L.; Liserre, M., "New optimal design method for trap damping sections in grid-connected LCL filters," *Energy Conversion Congress and Exposition (ECCE), 2014 IEEE* , vol., no., pp.3620,3627, 14-18 Sept. 2014.
41. X. Wang, Y. W. Li, F. Blaabjerg, and P. C. Loh, “Virtual-impedance-based control for voltage-source and current-source converters," IEEE Transactions on Power Electronics (Early Access Article, DOI: 10.1109/TPEL.2014.2382565).
42. X. Wang, F. Blaabjerg, and P. C. Loh, “Virtual RC damping of LCL-filtered voltage source converters with extended selective harmonic compensation,” IEEE Transactions on Power Electronics (Early Access Article, DOI: 10.1109/TPEL.2014.2361853).
43. X. Wang, F. Blaabjerg, and P. C. Loh, “Grid-current-feedback active damping for LCL resonance in grid-connected voltage source converters,” IEEE Transactions on Power Electronics (Early Access Article, DOI: 10.1109/TPEL.2015.2411851).
44. Y. Yang, H. Wang, and F. Blaabjerg, "Reduced junction temperature control during low-voltage ride-through for single-phase photovoltaic inverters,“ IET Power Electronics, pp. 1-10, 2014.
45. D. Zhou, F. Blaabjerg, M. Lau, and M. Tonnes, "Thermal cycling overview of multi-megawatt two-level wind power converter at full grid code operation", IEEJ Journal of Industry Applications, vol.2, no.4 pp.173–182, 2013.
46. K. B. Pedersen, P. K. Kristensen, V. Popok, and K. Pedersen, "Micro-sectioning approach for quality and reliability assessment of wire bonding interfaces in IGBT modules", Microelectronics Reliability, Vol. 53, no. 9-11, pp. 1422–1426, Sep 2013.
47. K. Ma, F. Blaabjerg "Thermal optimized modulation method of three-level NPC inverter for 10 MW wind turbines under low voltage ride through", IET Journal on Power Electronics, vol. 5, no. 6, pp. 920-927, Jul 2012.
48. R. Wu, F. Blaabjerg, H. Wang, and M. Liserre, "Overview of catastrophic failures of freewheeling diodes in power electronic circuits", Microelectronics Reliability, Vol. 53, no. 9–11, Pages 1788–1792, Sep 2013.

References

48. F. Blaabjerg and K. Ma, "Wind Energy Systems," in *Proceedings of the IEEE*, vol. 105, no. 11, pp. 2116-2131, Nov. 2017. doi: 10.1109/JPROC.2017.2695485
Open Access : URL: http://ieeexplore.ieee.org/stamp/stamp.jsp?tp=&arnumber=7927779&isnumber=8074545

49. F. Blaabjerg, Y. Yang, D. Yang and X. Wang, "Distributed Power-Generation Systems and Protection," in *Proceedings of the IEEE*, vol. 105, no. 7, pp. 1311-1331, July 2017. doi: 10.1109/JPROC.2017.2696878
Open Access : URL: http://ieeexplore.ieee.org/stamp/stamp.jsp?tp=&arnumber=7926394&isnumber=7951054

AALBORG UNIVERSITY
DENMARK