The Roles of Power Electronics in Renewable Energy Deployment

Credit: NREL – pix library

Eduard Muljadi
National Renewable Energy Laboratory

Panel Presentation
IEEE-PES-ISGT 2014

Washington, DC
February 19-22, 2013

IEEE PES Power & Energy Society®

IEEE

Outline

- Introduction
- Renewable energy resources
- Grid integration
- Power electronics control
- Environment

Introduction

- Applications
  - mW or MW level
  - Isolated or grid connected
- Variability of the source
  - Temporal (seconds, hour, day, week, season)
  - Spatial (continental, local, plant)
- Large area coverage – Diversity (resource and electrical characteristics)
- Operation
  - Normal/abnormal
  - Balanced/unbalanced

Introduction

Credit Sun Power Corp. / 23816

PV Plant (5~50 MW)

Rooftop PV (1~30 kW)

Credit: Dennis Schroeder / NREL / 22192.JPG

Credit DOE / FEMP /27638

Mobile 9-kW PV System
Bechler Meadows Ranger Station
Yellowstone National Park

Wind Resource – Midwest

Spring Peaking

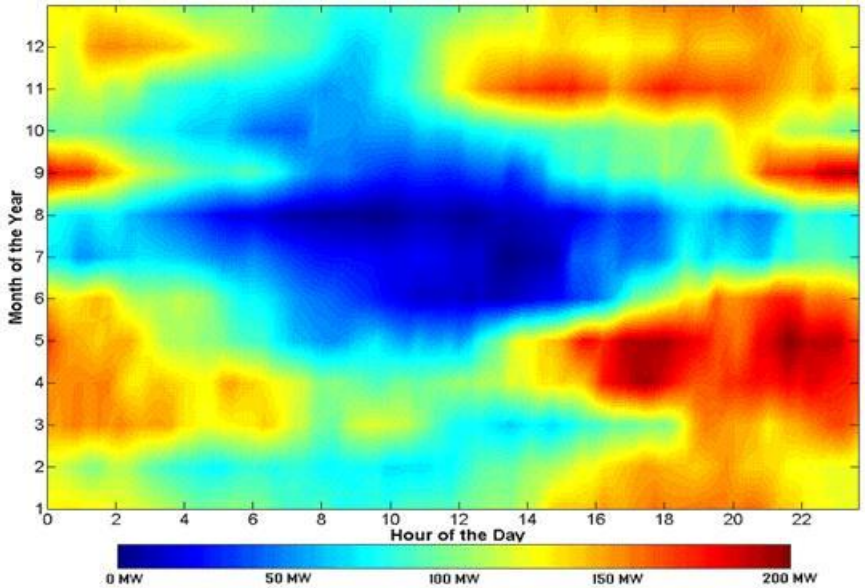

Typical Wind Power Output
Hourly Average
Summer 2006 - Southern California

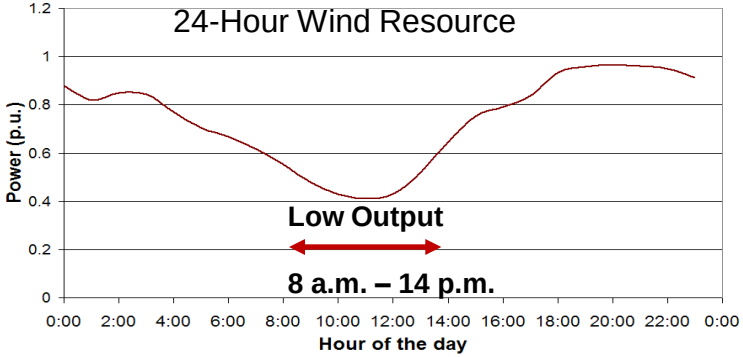

Wind Resource – West Coast

Summer Peaking

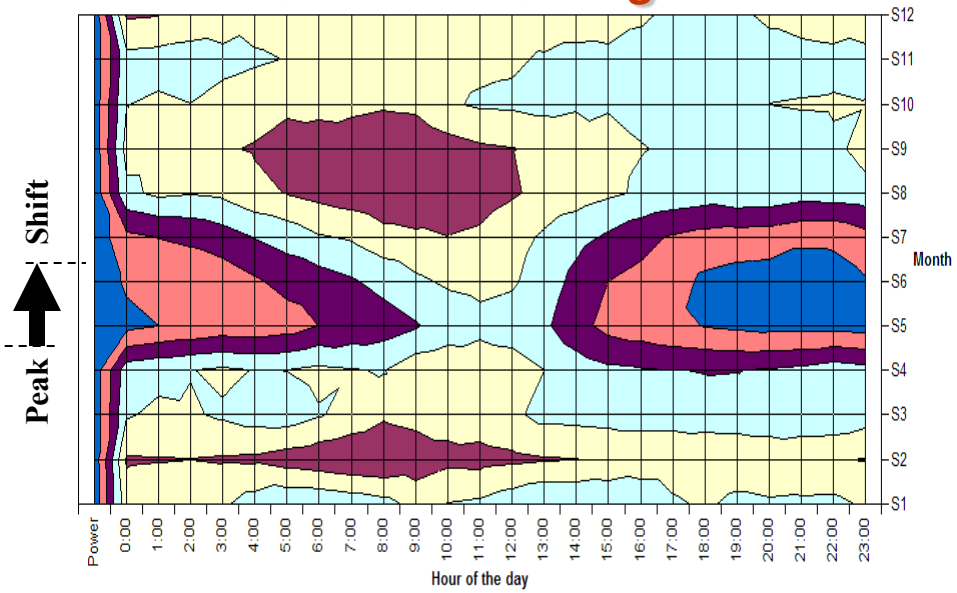

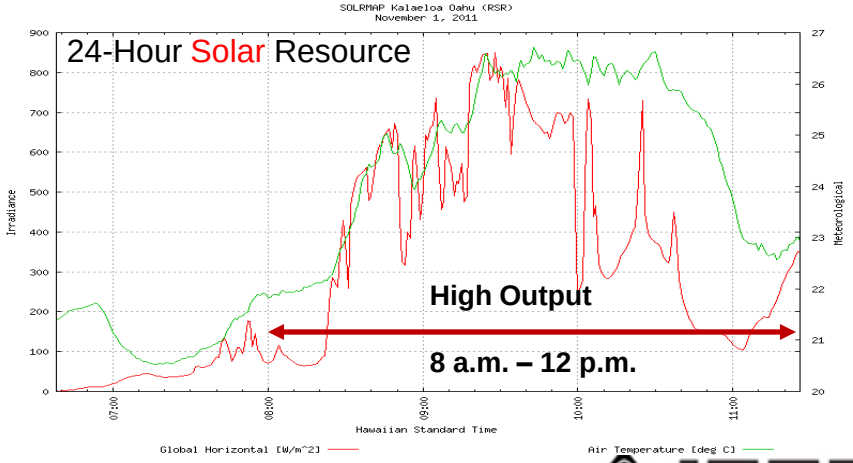

Resources

Offshore Wind Resource

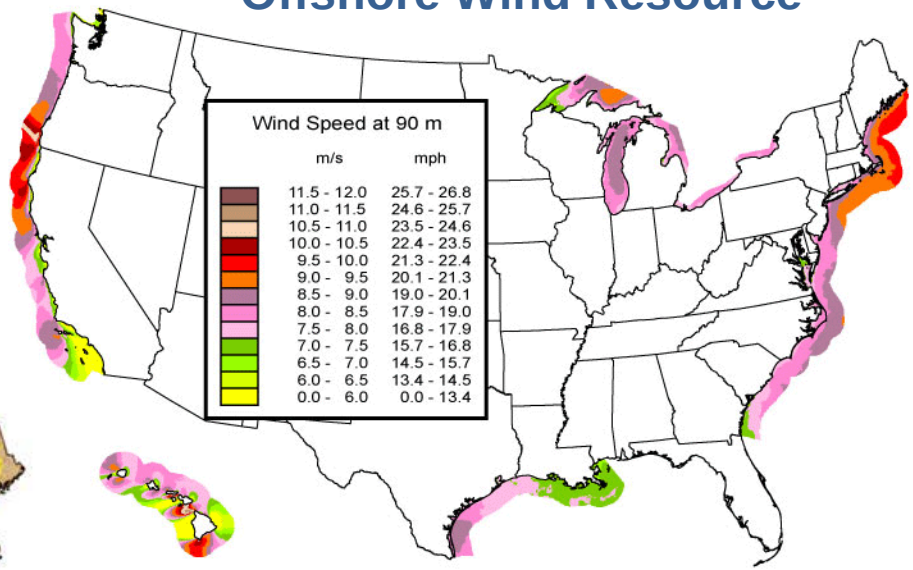

U.S. Wind Resource

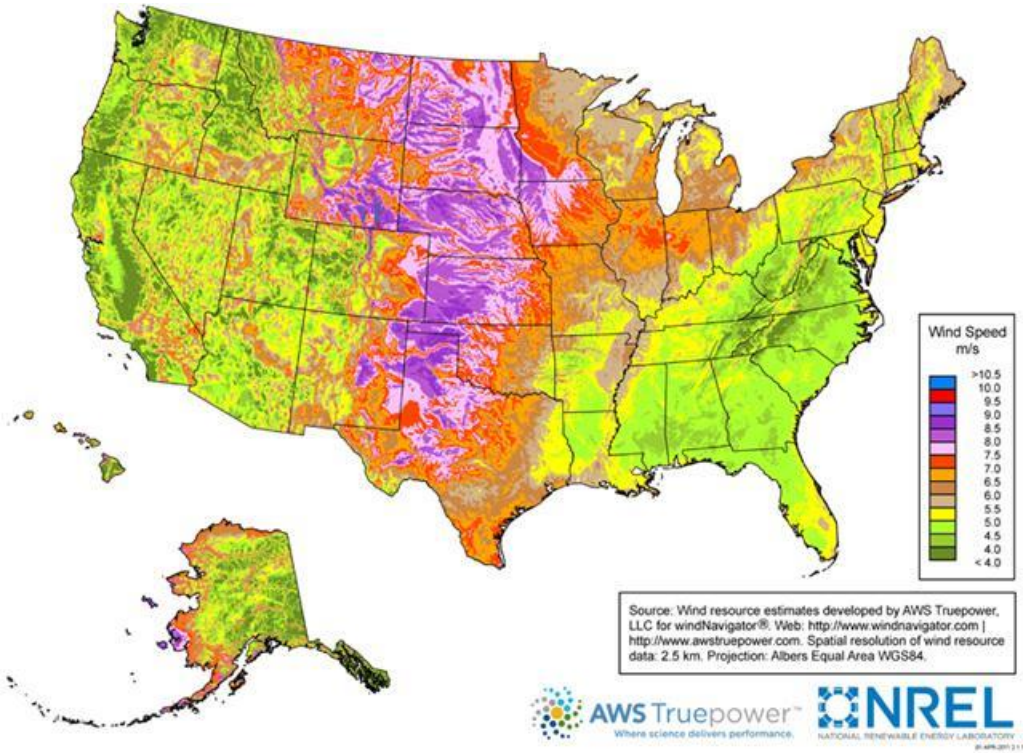

Solar Resource

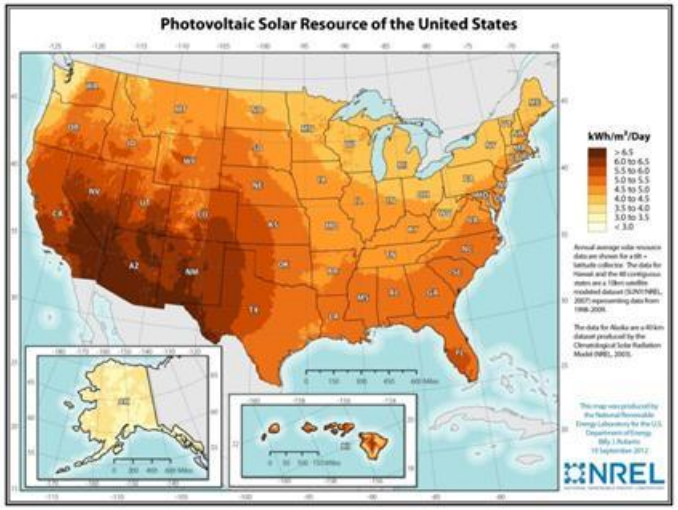

Synchronous Generator (left) vs. Wound Rotor Induction Generator (right)

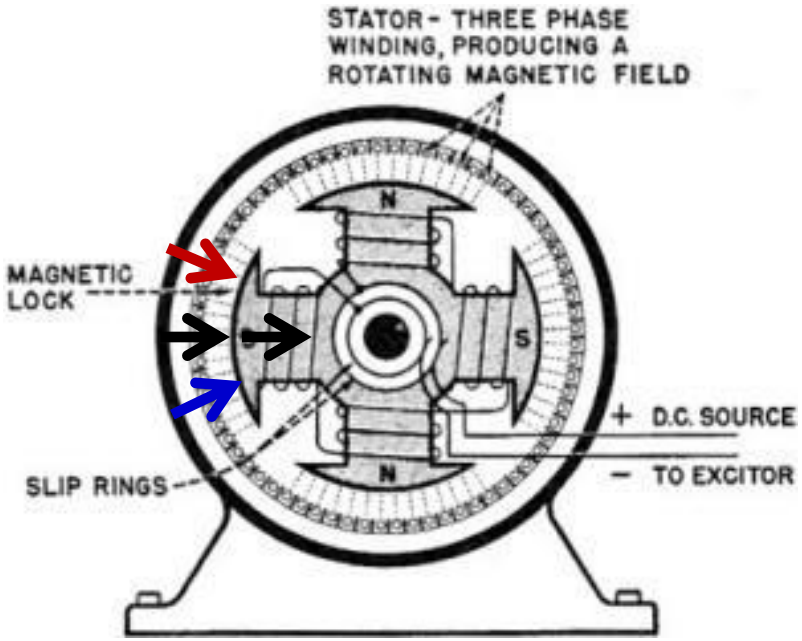

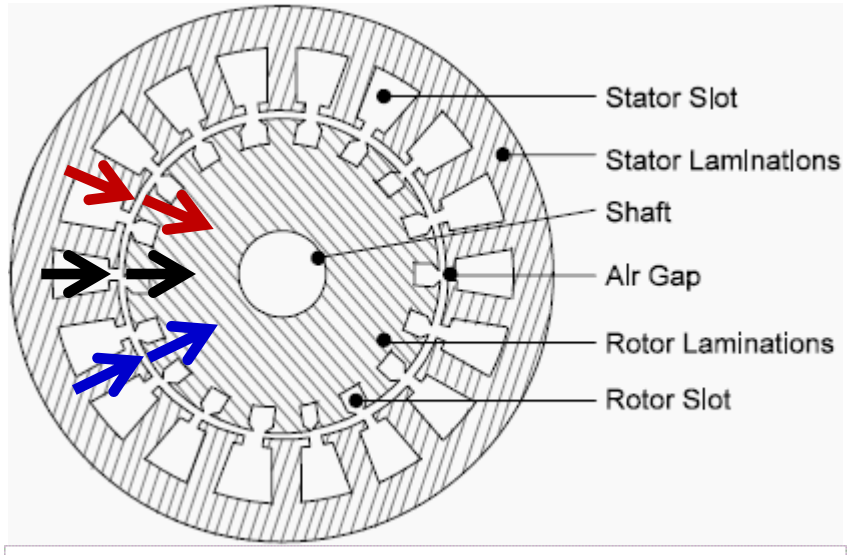

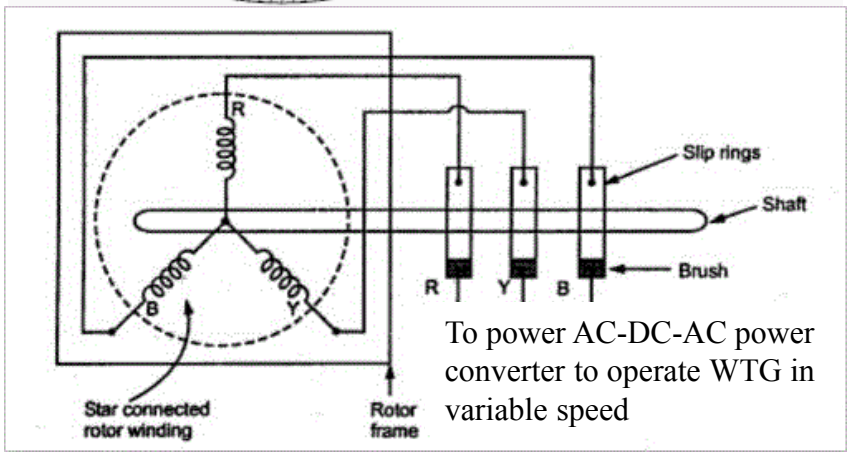

To power AC-DC-AC power converter to operate WTG in variable speed

What will happen if there is a sudden disturbance in the transmission network?

Conventional Power Plant vs. Renewable Energy Power Plant

U.S. NRC image of a modern steam turbine generator
Credit: Wikipedia

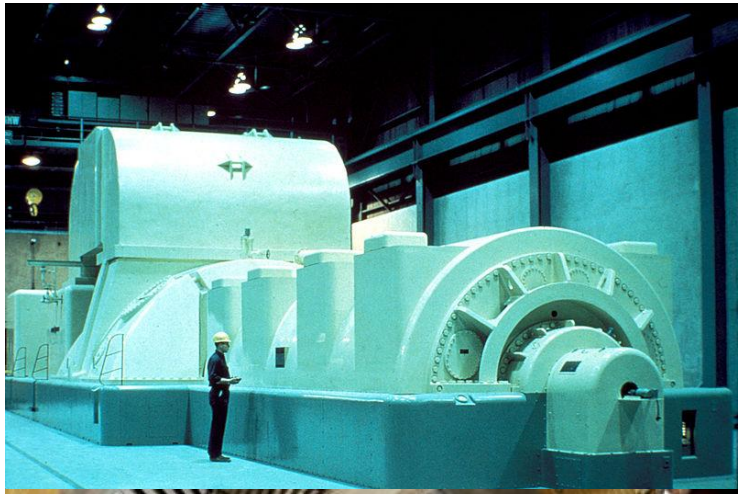

http://www.energy.siemens.com/hq/en/

Generator Sgen 4,000-W (Siemens)
1,300 to 2,235 MVA

Credit: David Hicks / NREL / 18454

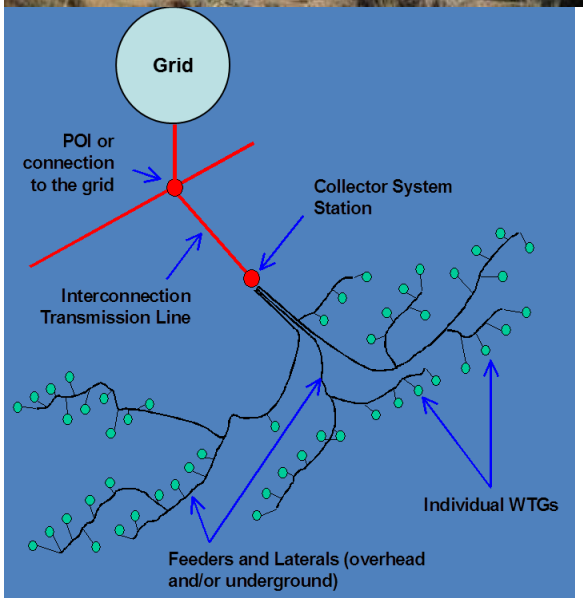

Wind Turbine Generator 1-6 MW

Plant Diversity

Type 1 Wind Turbine Generator (1% Slip)

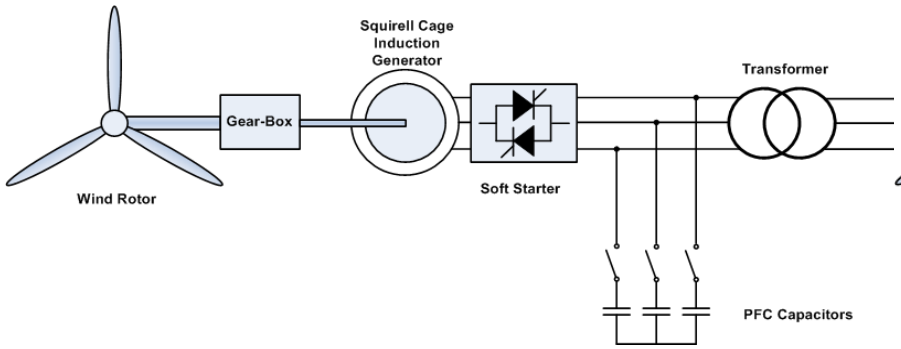

Type 2 Wind Turbine Generator (10% Slip)

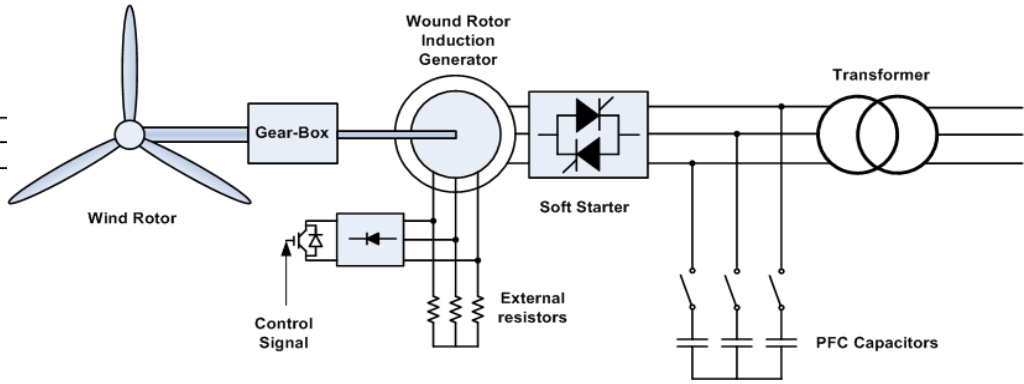

Type 3 Wind Turbine Generator (± 30% Slip)

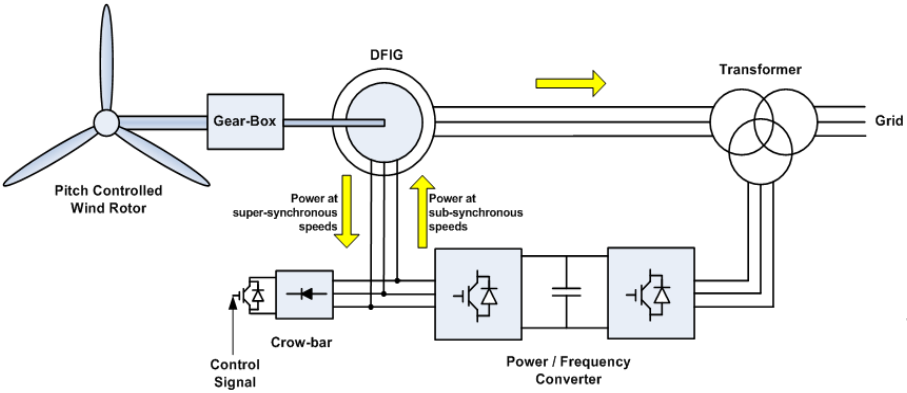

Type 4 Wind Turbine Generator (Full Conversion)

(100% Slip)

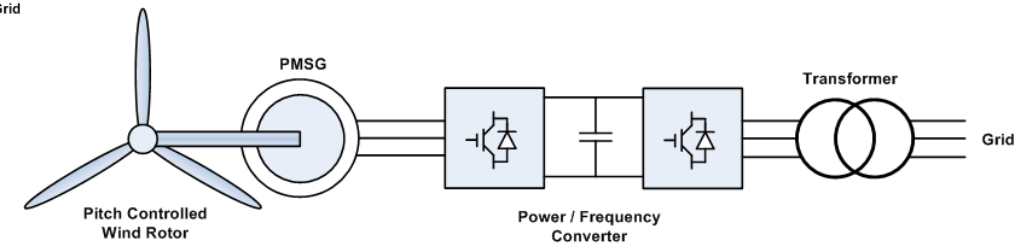

Examples of Renewable Energy Resources

Credit: Bill Timmerman/ 08989

Credit: David Hicks / NREL / 18557

Credit Greg Glatzmaier / NREL / 19807

Credit: NREL – David Hicks / NREL 19881

Credit: Dennis Schroeder / NREL / 27806

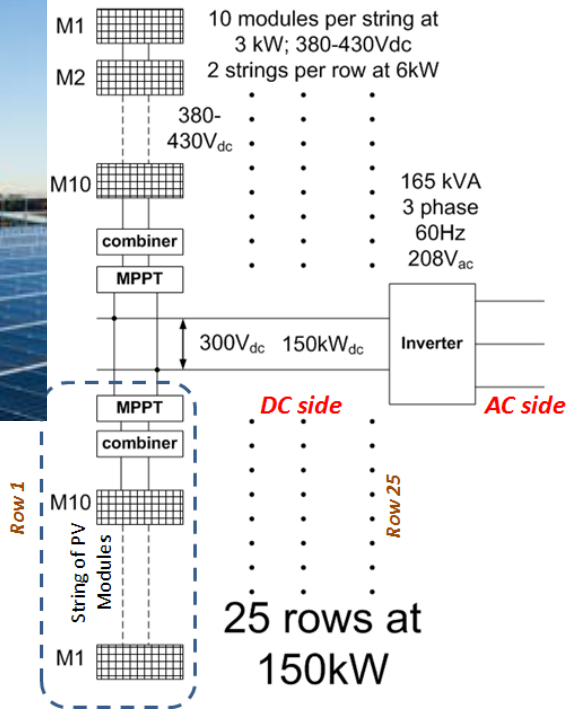

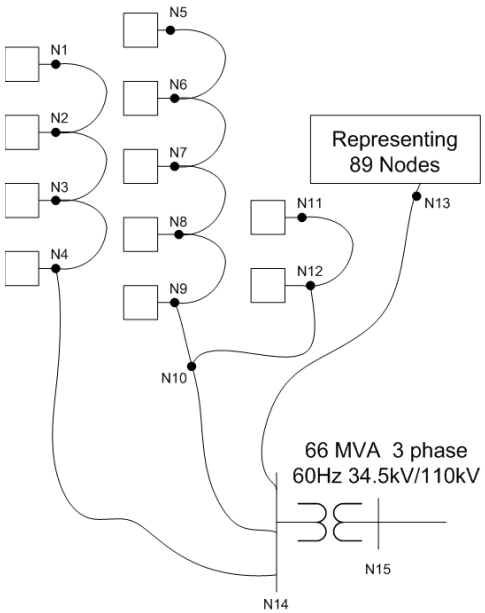

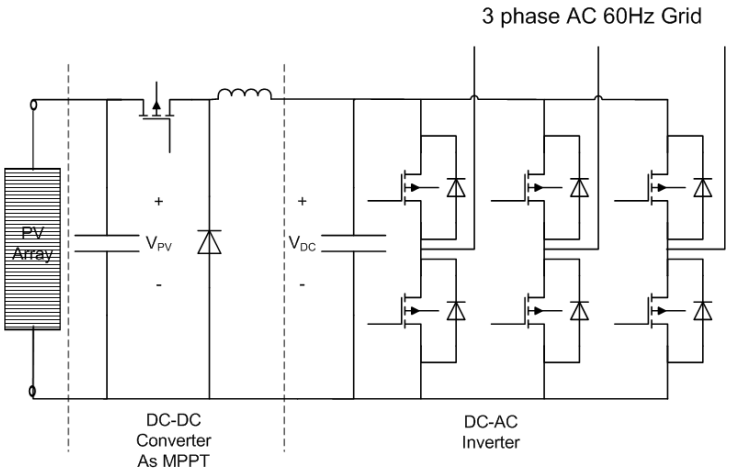

650 kVA 3 phase
60Hz 480V/34.5kV

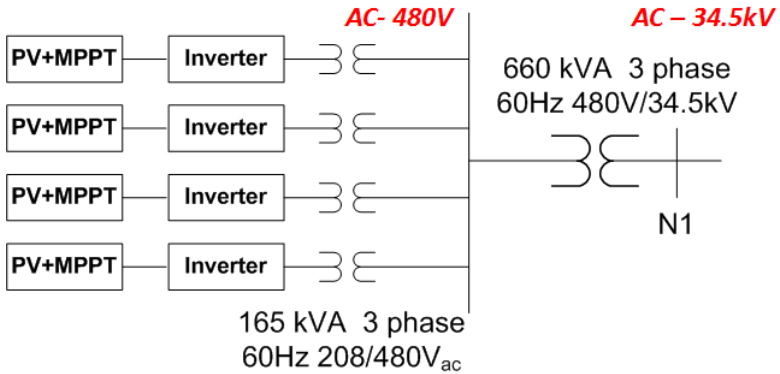

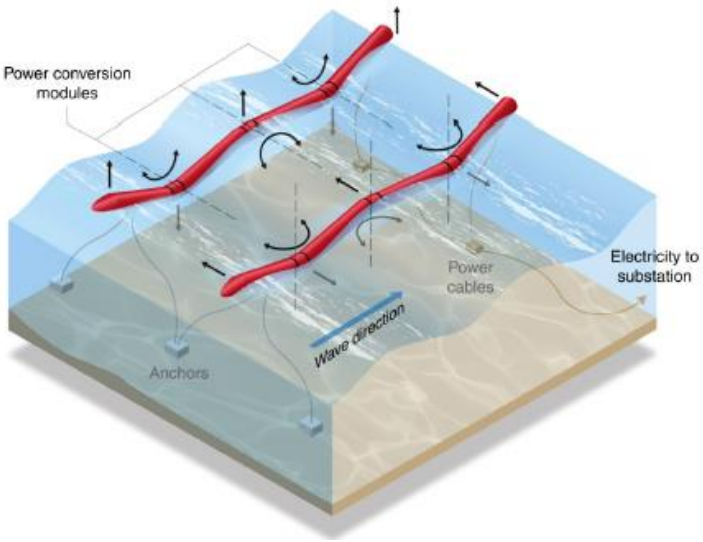

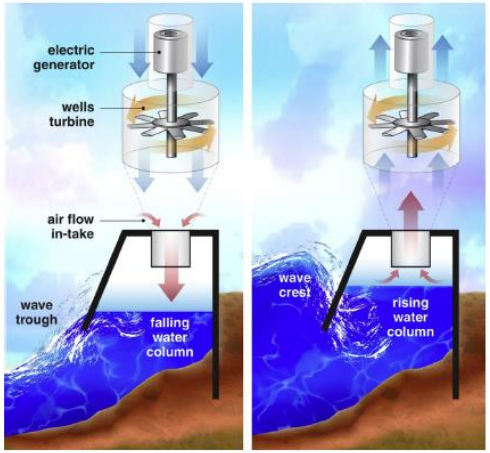

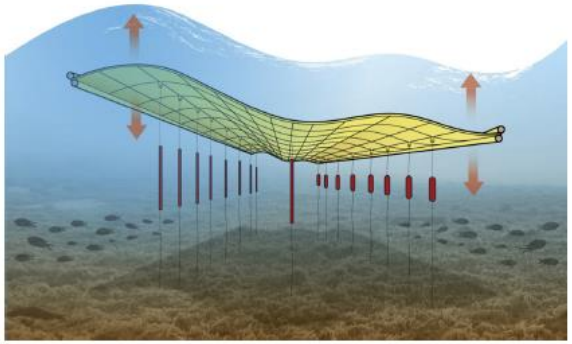

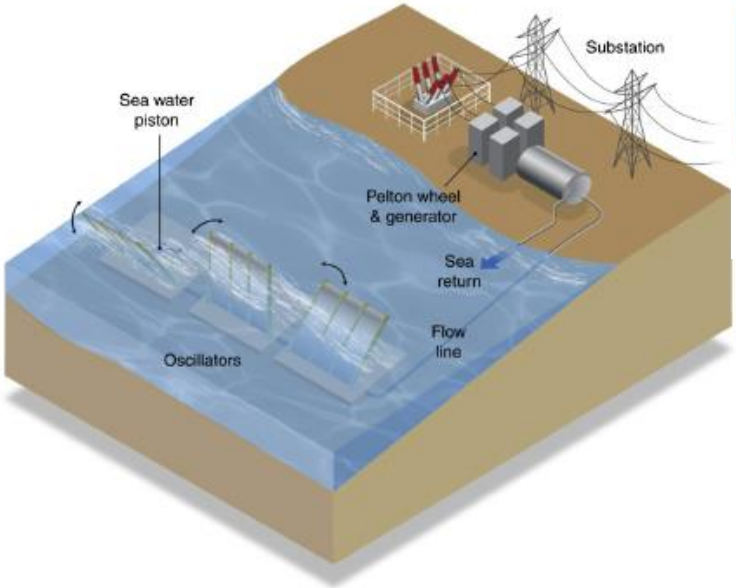

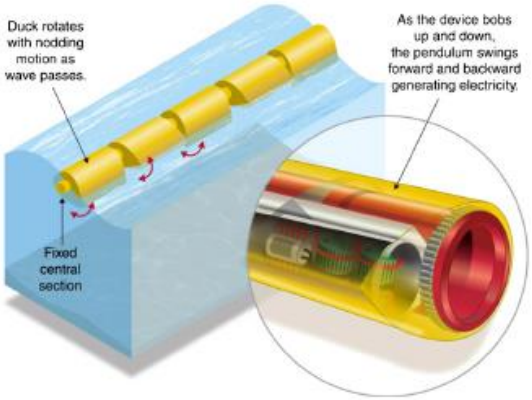

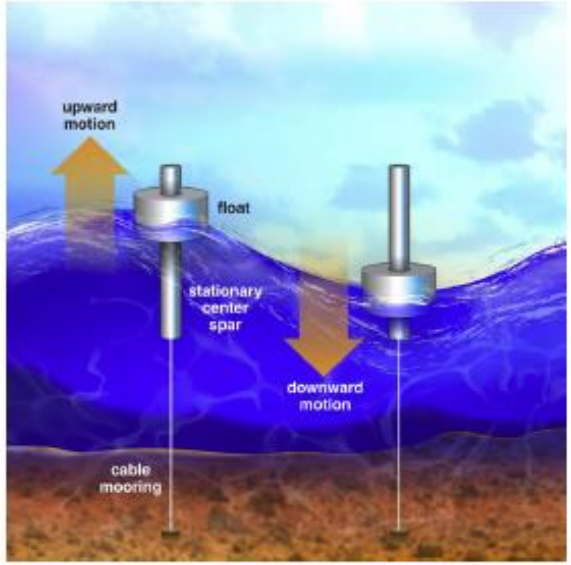

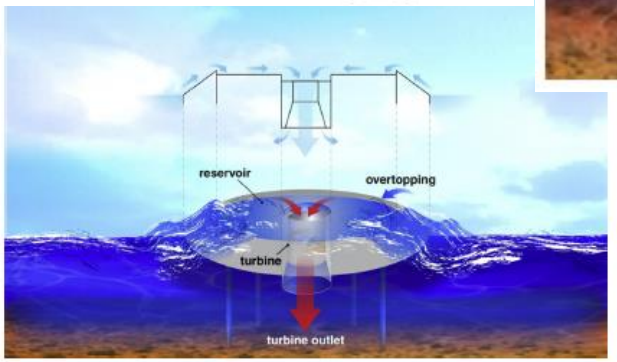

Reference: Li, Y.; Yu, Y. H. (2012). Synthesis of Numerical Methods for Modeling Wave Energy Converter-Point Absorbers: Preprint. 36 pp.; NREL Report No. JA-5000-52115.

Grid Integration

- Interconnection
- Operation
- Standards – Grid codes
- Ancillary services (inertial response, frequency and governor response, reserves)

Interconnection

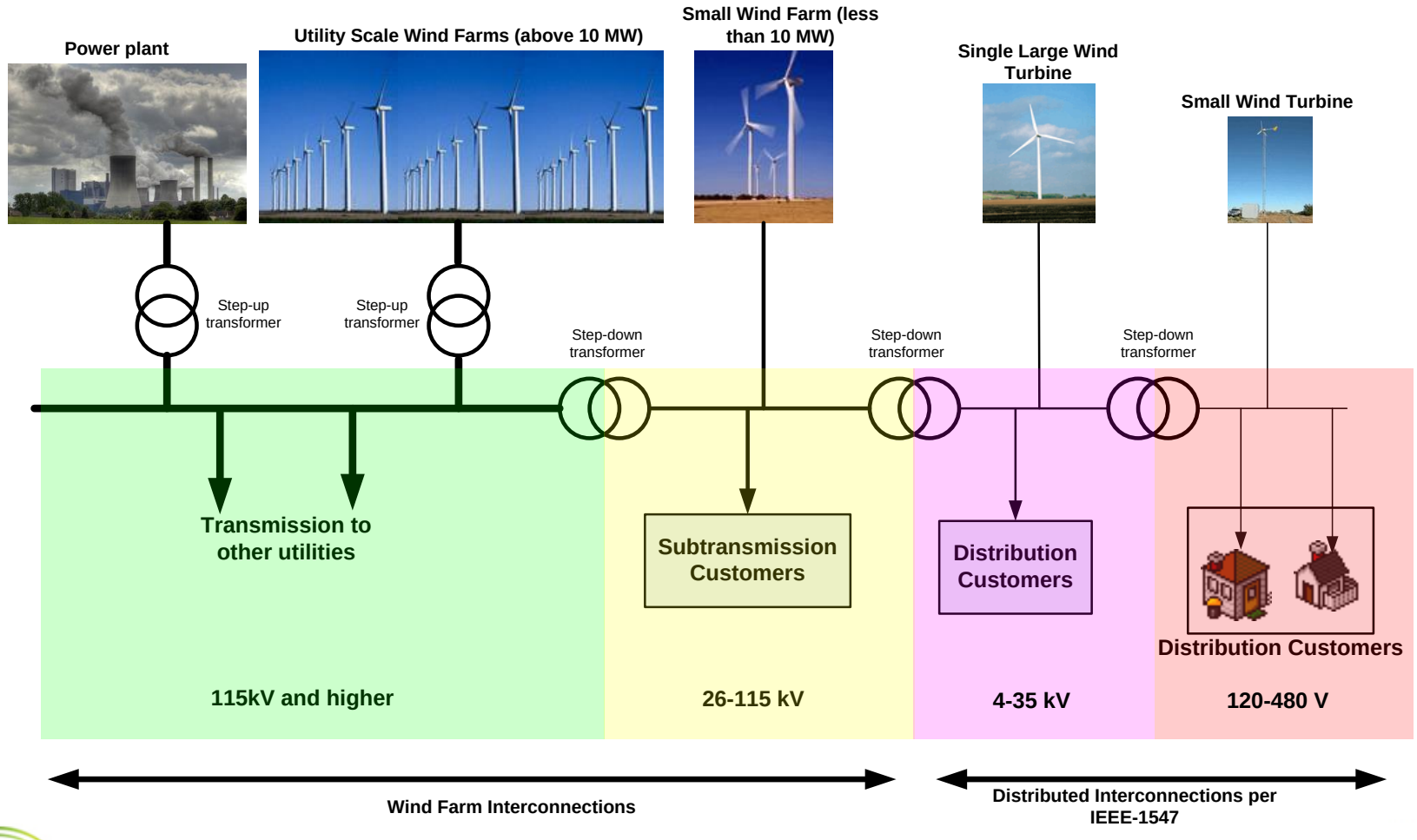

Credit: NREL's TGIG presentation archive.

Real and Reactive Power Balance

(To Keep Frequency and Voltage Constant)

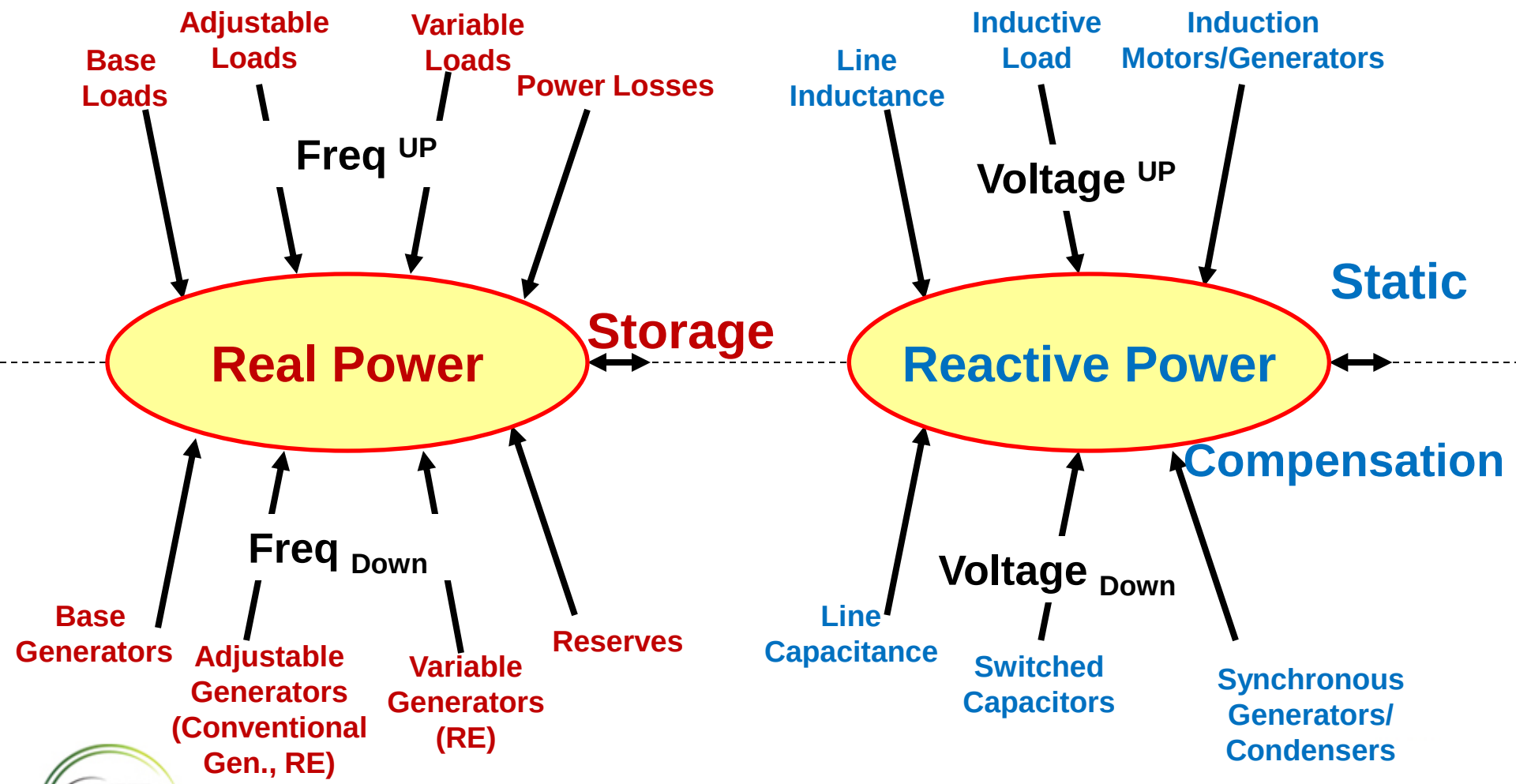

Fault Ride-Through Capability

- Wind power plants should be able to stay on-line under transient faults/disturbances.
- The voltage should tolerate 0 p.u. for 15 ms (9 cycles).
- Wind power plants should be able to regulate the power factor between 0.95 leading/lagging.
- Wind power plants should have a SCADA system to allow remote access and monitoring.

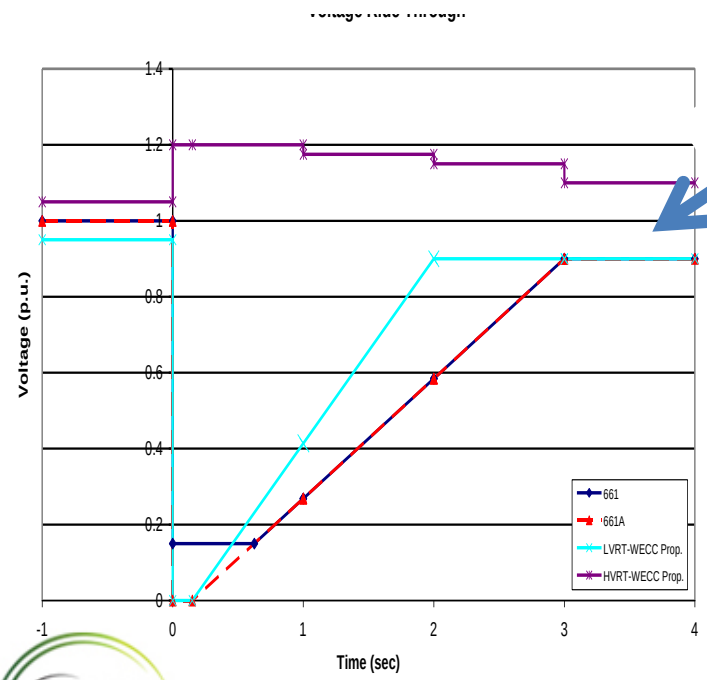

Compatible?

Voltage vs. Maximum Clearing Time as Described in IEEE 1547

Default settings[a]		
Voltage range (% of base voltage[b])	Clearing time (s)	Clearing time: adjustable up to and including (s)
V < 45	0.16	0.16
45 ≤ V < 60	1	11
60 ≤ V < 88	2	21
110 < V < 120	1	13
V ≥ 120	0.16	0.16

[a] Under mutual agreement between the EPS and DR operators, other static or dynamic voltage and clearing time trip settings shall be permitted

[b] Base voltages are the nominal system voltages stated in ANSI C84.1-2011, Table 1.

Adaptable to Regional Code

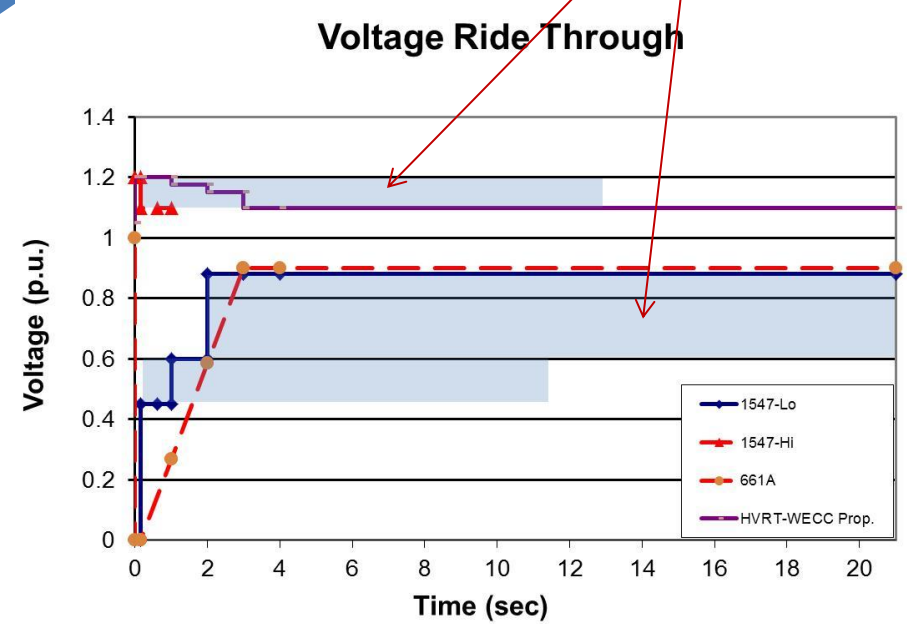

Power Electronics Control

- Generator level
- Plant level
- Transmission level

Load Control
Gearbox Preservation

Provide Active Damping to
Power System Network

Maximize Energy Capture

Inertial Response
Spinning Reserve

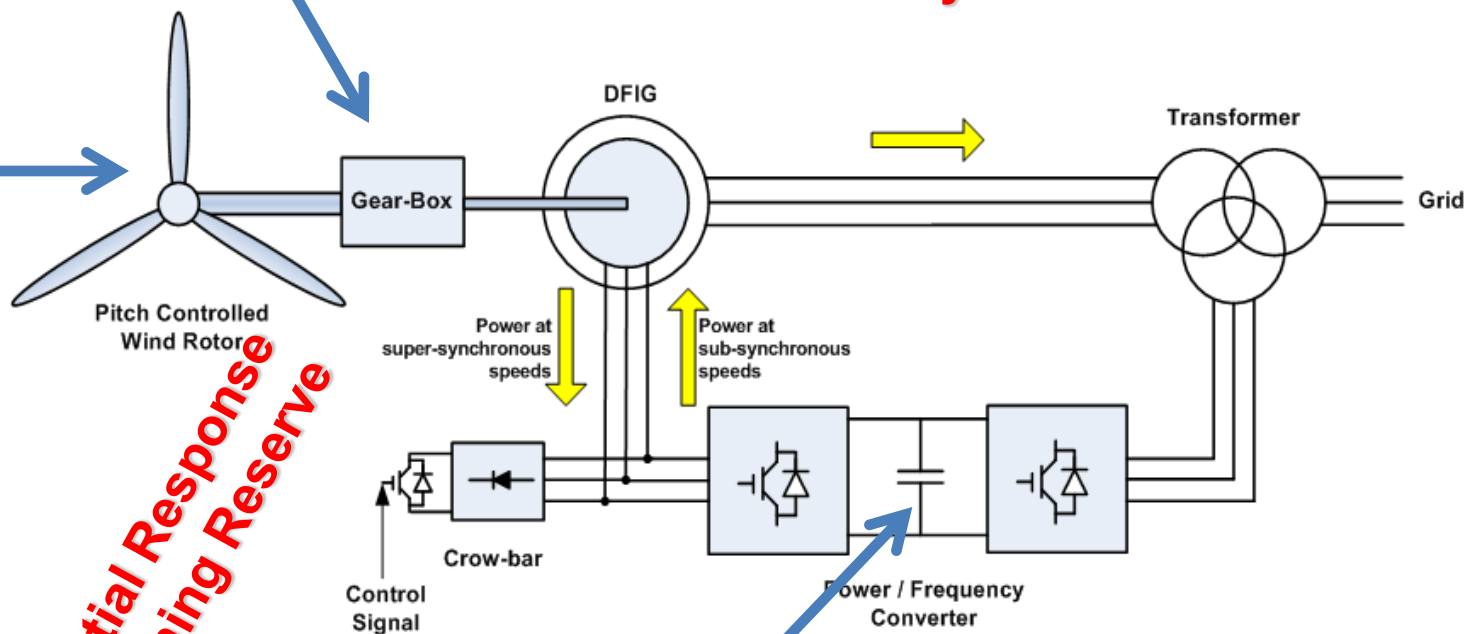

Power Quality
Real and Reactive Power Control

Short/Long-Term DC
Distributed Storage

At the
Generator Level

Virtual Inertia
Spinning Reserve

Provide Active Damping to
Power System Network

Maximize Energy Capture

Power Quality
Real and Reactive Power Control

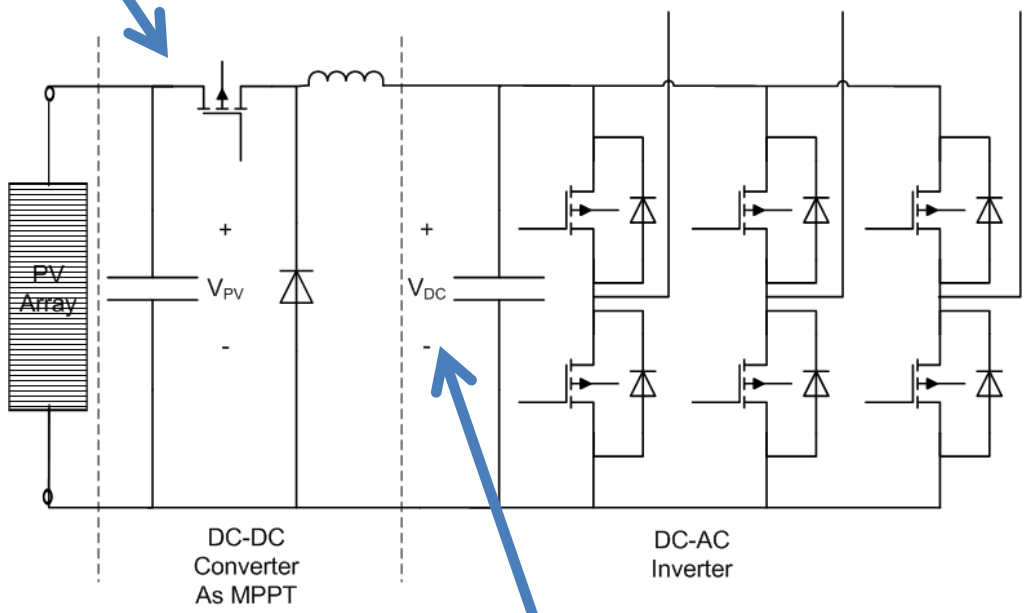

650 kVA 3 phase
60Hz 480V/34.5kV

Short/Long-Term DC
Distributed Storage

At the
Generator Level

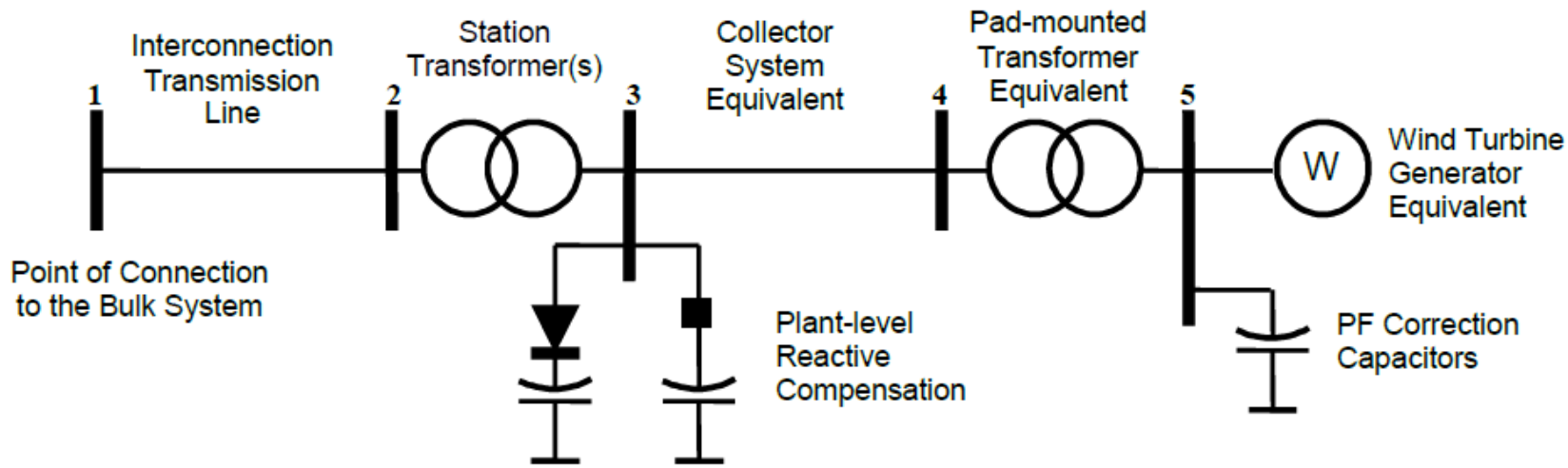

- Many (hundreds) of wind turbines (1 MW to 5 MW each)
- Prime mover: Wind (wind turbine) – Renewable (free, natural, pollution free)
- Controllability: Curtailment
- Predictability: Wind variability based on wind forecasting, influenced more by nature (wind) than humans, based on maximizing energy production (unscheduled operation).
- Located at wind resource; may be far from the load center.
- Generator: Four different types (fixed speed, variable slip, variable speed, full converter) – Non-synchronous generation
- Types 3 and 4: Variable speed with flux-oriented controller (FOC) via power converter. Rotor does not have to rotate synchronously.

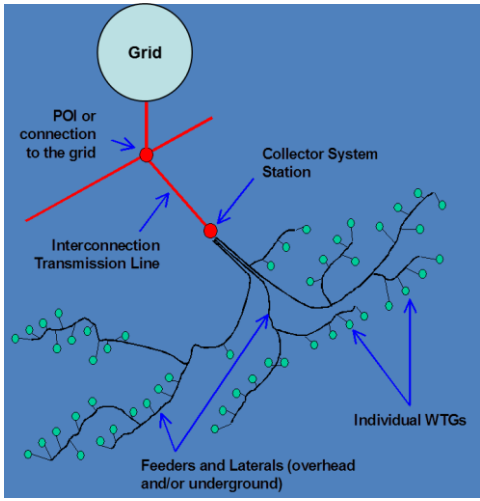

At the Plant Level

Inertial Response from a Wind Turbine

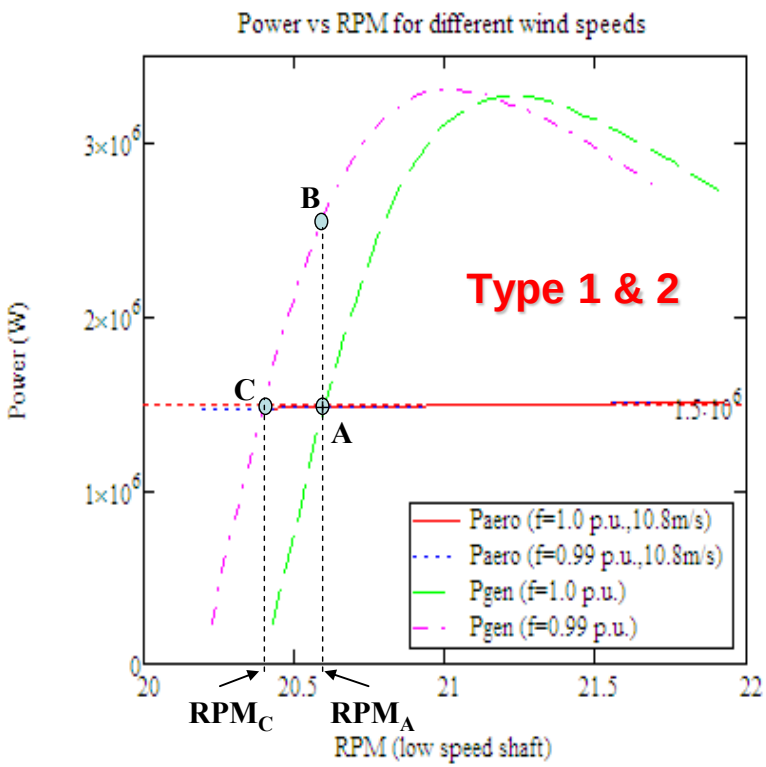

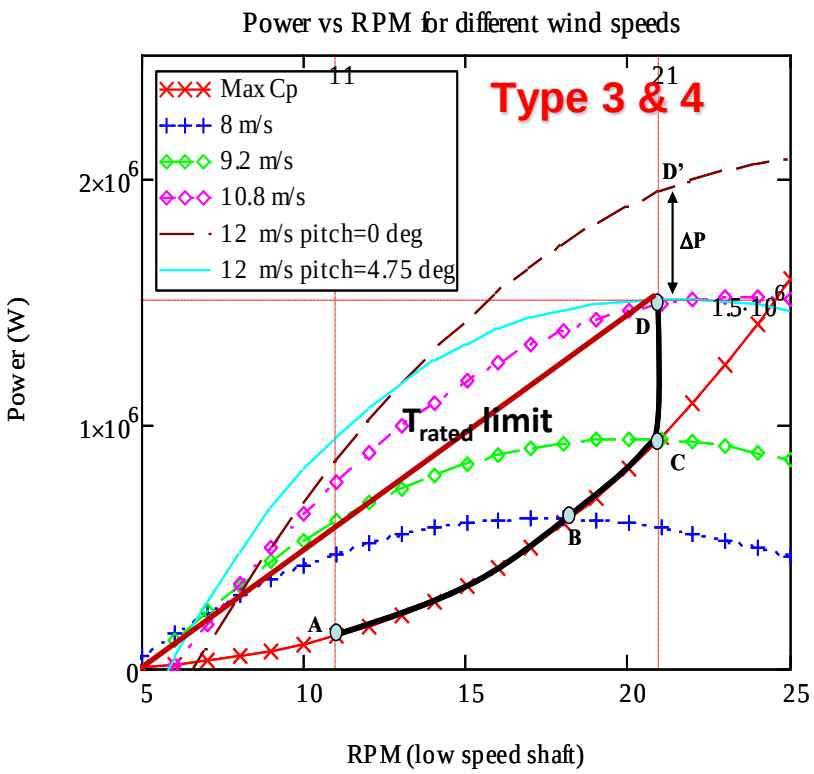

At the Plant Level

Variability

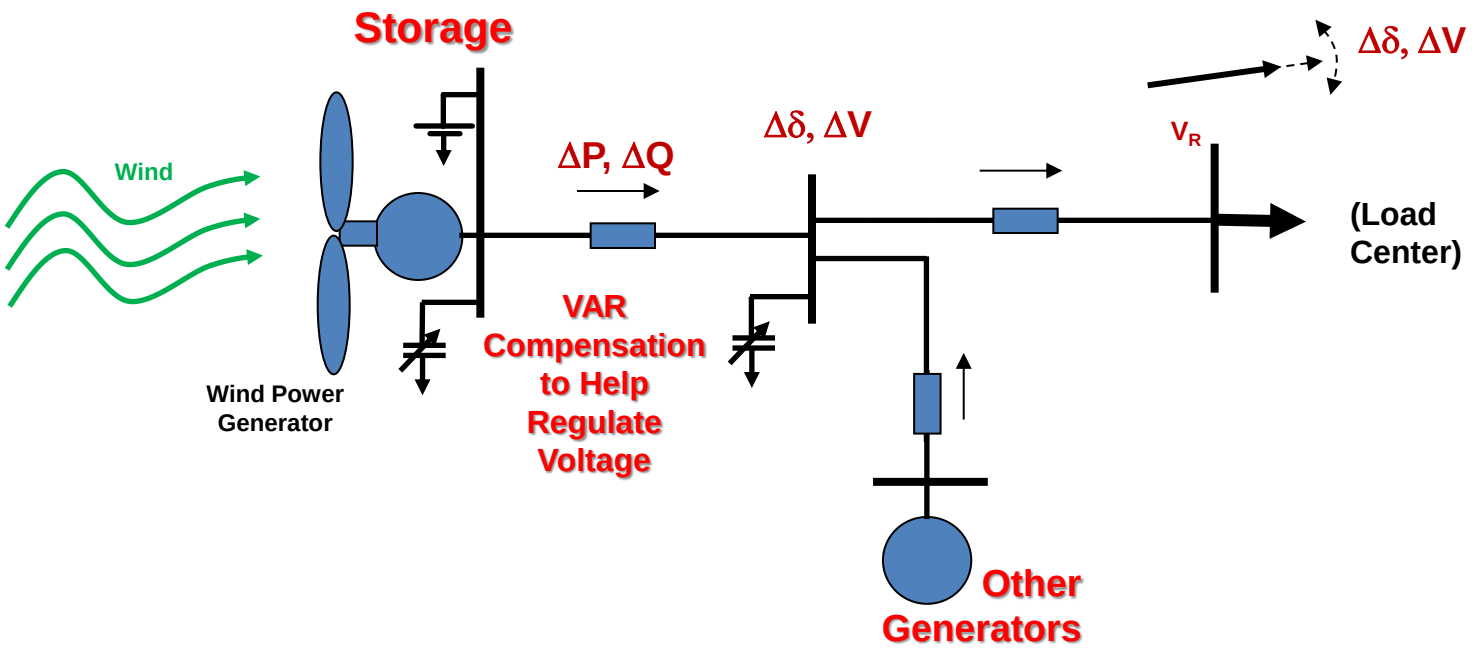

At the Transmission Level

Transmission Constraints

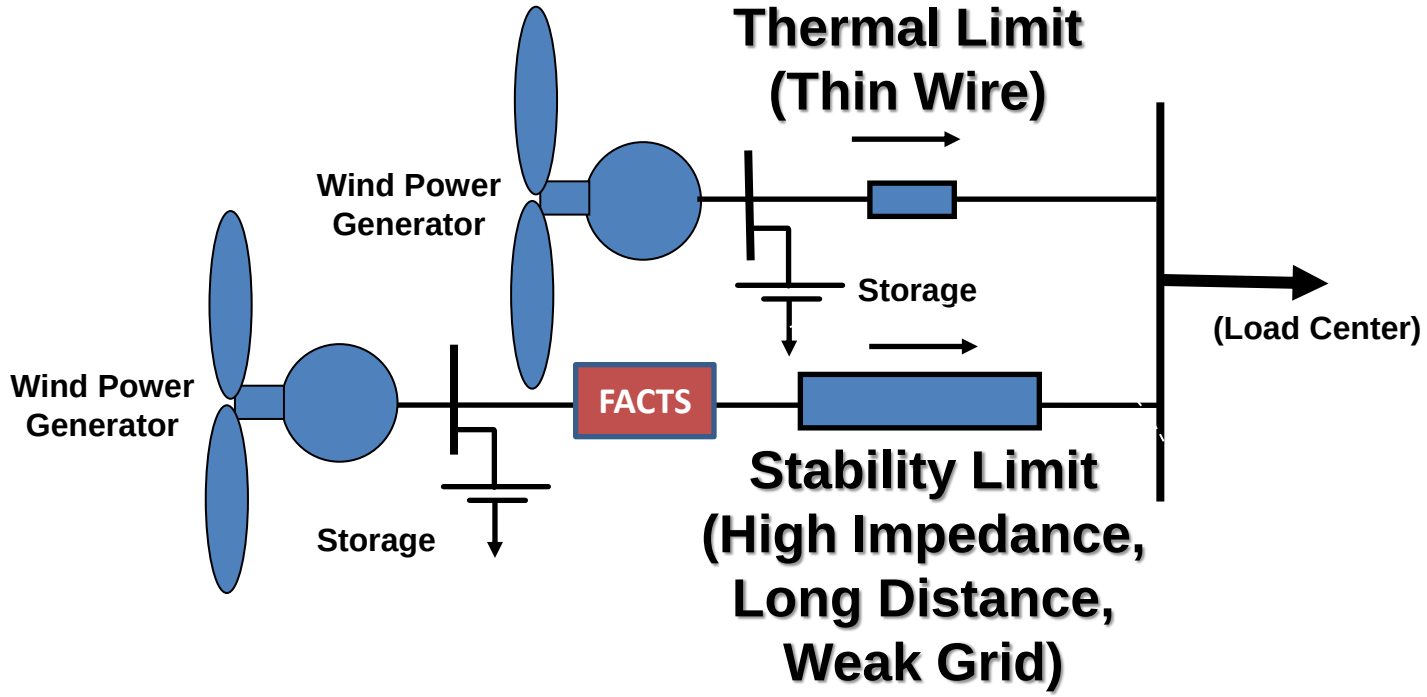

At the Transmission Level

Environment

Lightning Protection

Reference: McNiff, B. (2002). Wind Turbine Lightning Protection Project: 1999-2001. 100 pp.; NREL Report No. SR-500-31115.

Credit: Stephen Drouilhet / 05626

Google Map of a wind power plant, Tehachapi, CA

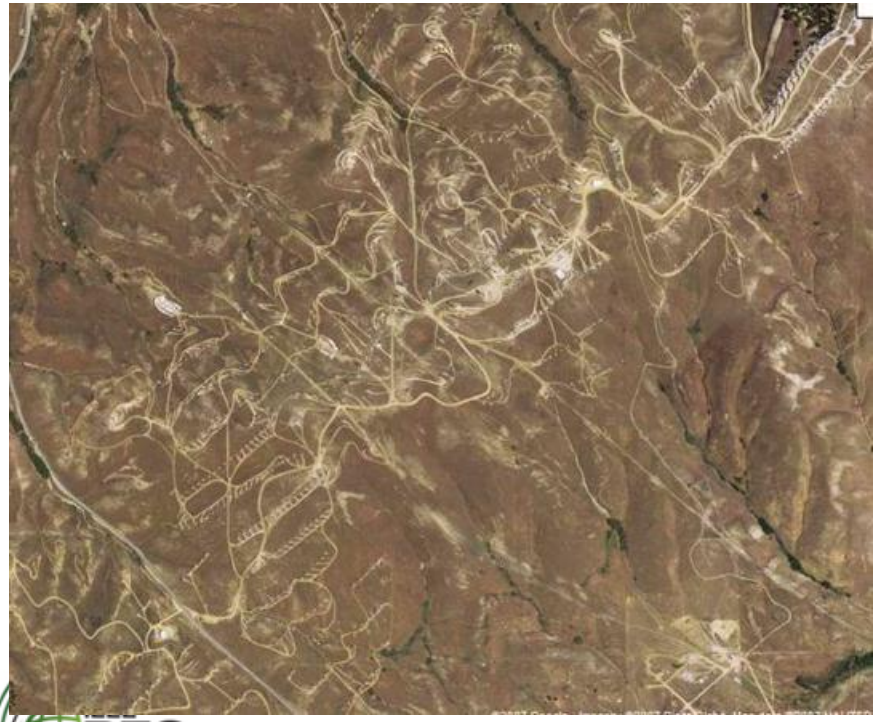

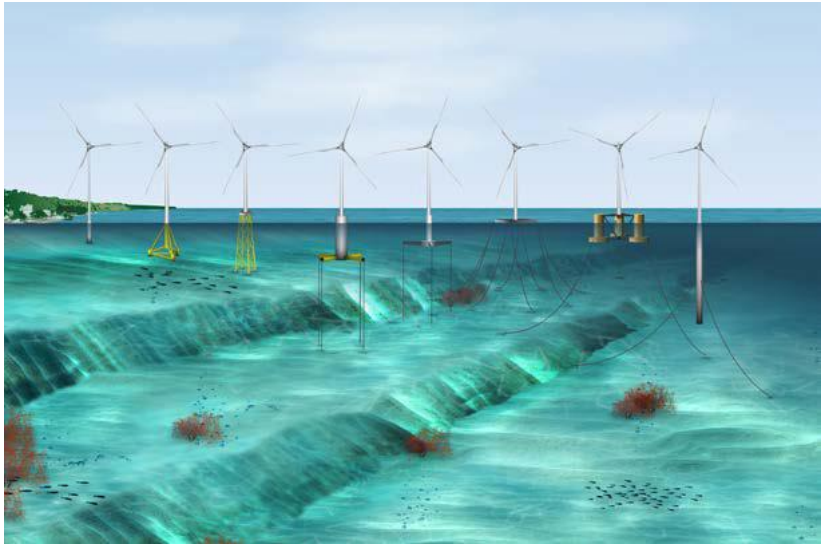

Reference: NREL Software Aids Offshore Wind Turbine Designs (Fact Sheet). Innovation Impact: Wind, NREL (National Renewable Energy Laboratory). (2013). 1 pg.; NREL Report No. FS-6A42-60377.

Conclusions

- Cost reduction in the past 20 years
- Many and diverse opportunities for Power Electronics
  - Generation, transmission, and distribution
- Know the limitations
  - Thermal, magnetic, electric (voltage, current) etc.
- Know the applications
  - Environment: Ocean, land-based, isolated, clusters
  - Opportunities to work in parallel (PV – Wind – CSP)
- Leverage existing and future technologies
  - Other industries (drives, transportation, ship building)
  - Modern technologies (smart control, wireless, condition monitoring, cyber physical and security, synchrophasor, market driven)