Commission canadienne de sûreté nucléaire
Canadian Nuclear Safety Commission

Design of Traditional and Advanced CANDU Plants

Artur J. Faya
Systems Engineering Division
November 2003

Canada

Overview

- Canadian Plants
- The CANDU Reactor
- CANDU 600 and ACR-700
  - Nuclear Steam Supply Systems
  - Fuel Bundle
  - Fuel Channel
  - Reactor Coolant System
  - Control Systems
  - Control Centres
  - Electrical Systems

Overview

- CNSC requirements
  - Safety Functions
  - Two Group Separation
  - CNSC Guide C-6 and Design Basis Events
- Shutdown Systems
- Emergency Core Cooling System
- Containment

Canadian Plants

Pickering NGS

Courtesy Ontario Power Generation

Darlington NGS

Courtesy Ontario Power Generation


Gentilly NGS
Courtesy Hydro Québec


Point Lepreau NGS
Courtesy NB Power

Bruce NGS

Courtesy Ontario Power Generation

The CANDU Plant

- CANDU = CANadian Deuterium-Uranium
- Cooled and moderated by heavy water
- Natural uranium fuel
- D less effective moderator than H

➔ larger separation between fuel bundles than in a LWR

➔ designers chose to have individually cooled channels about one bundle thick with heavy water moderator surrounding the channel

NSSS – PHWR & PWR

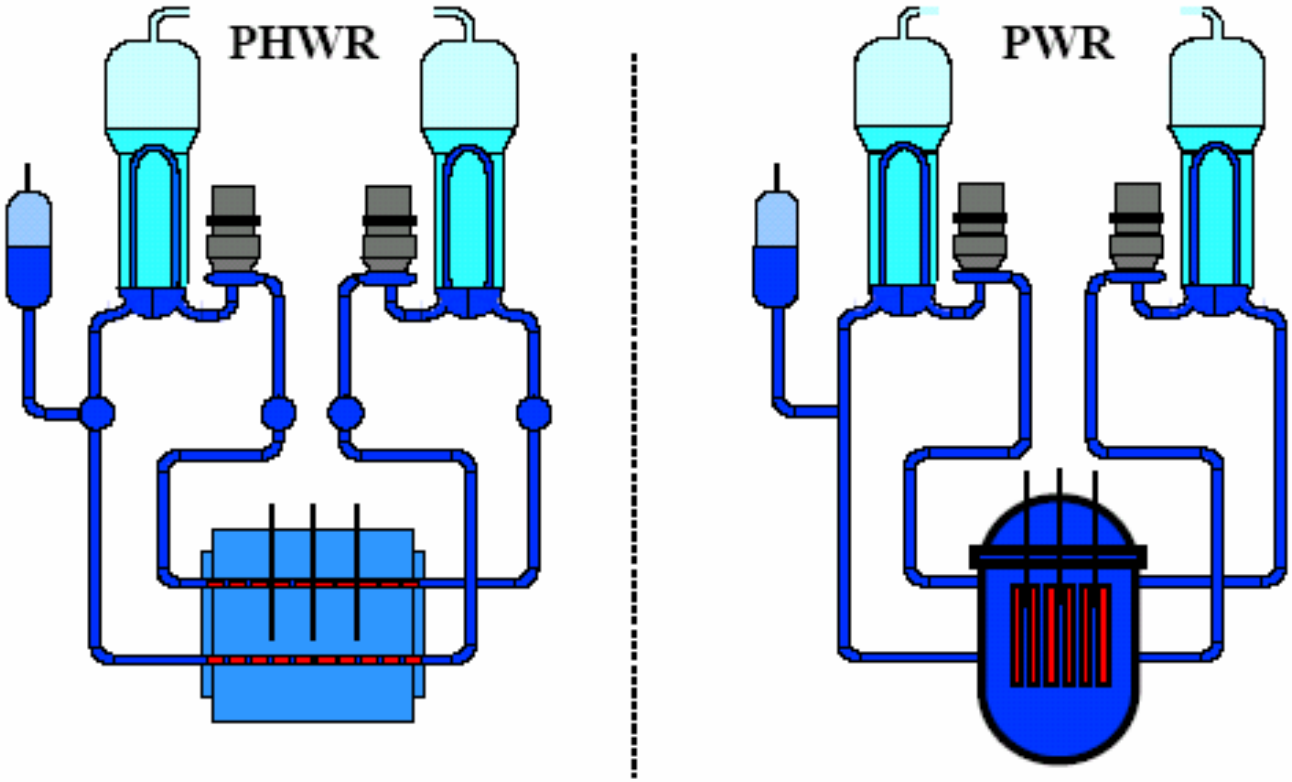

CANDU 6 Reactor Coolant System

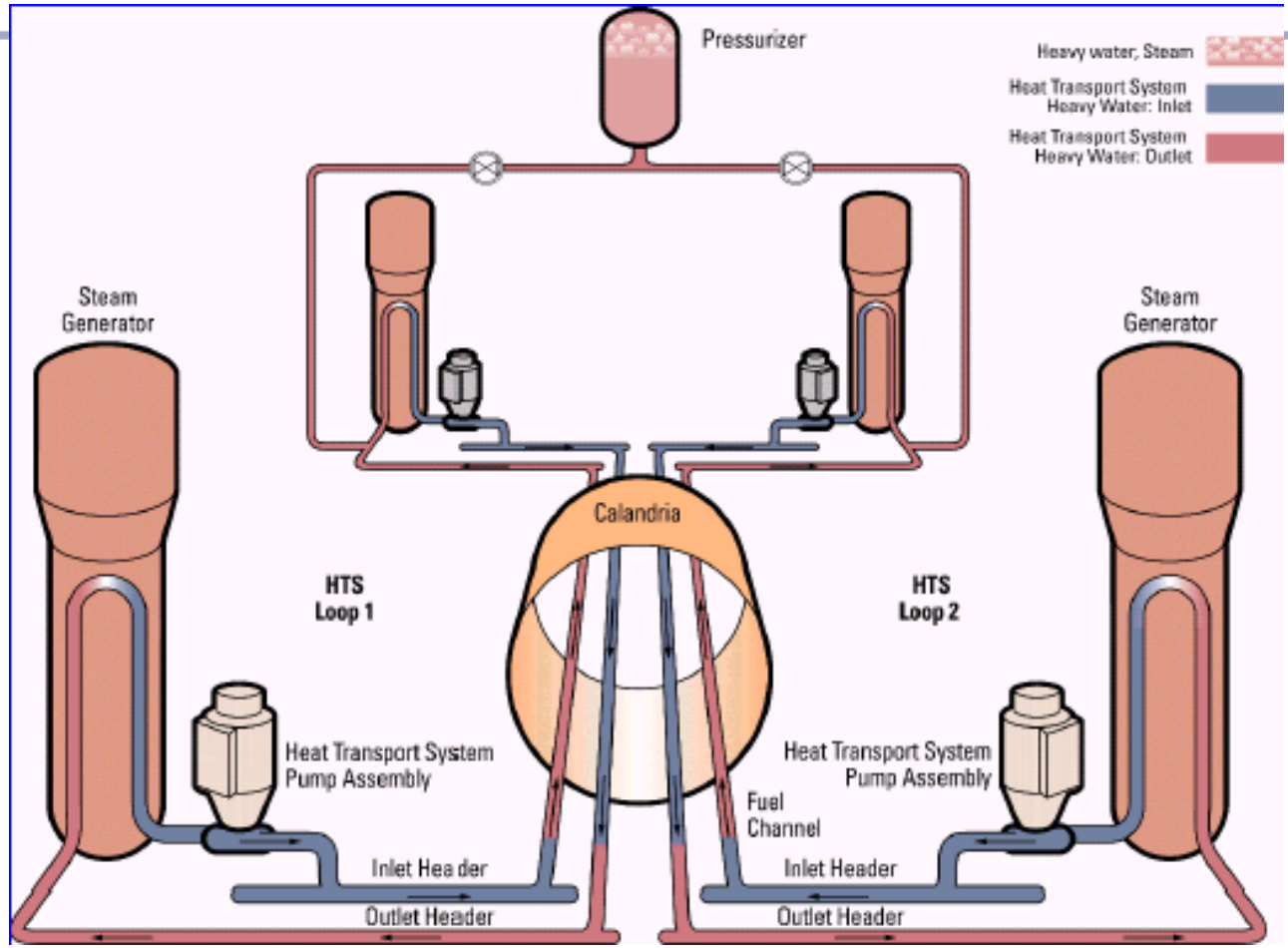

CANDU Plant
Candu 6 Fuel Bundle

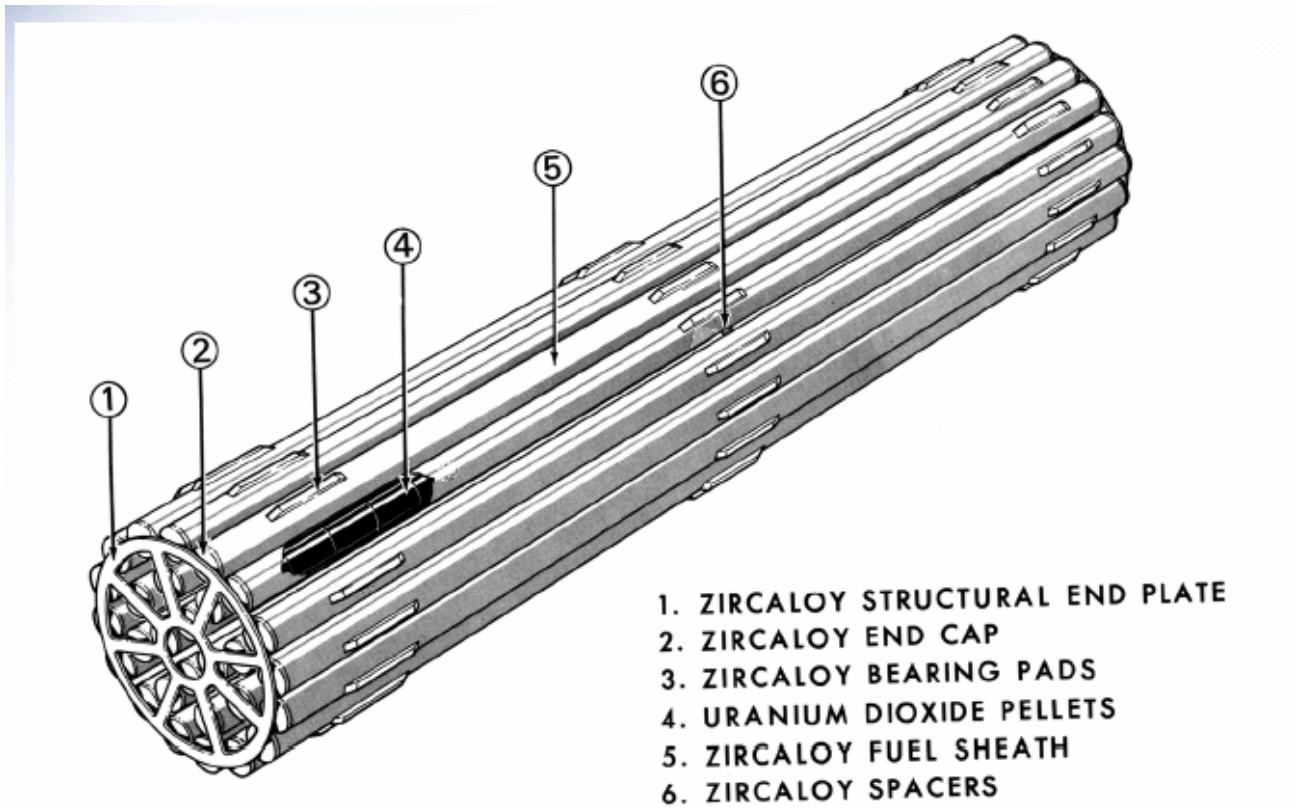

CANDU Plant Fuel Channel

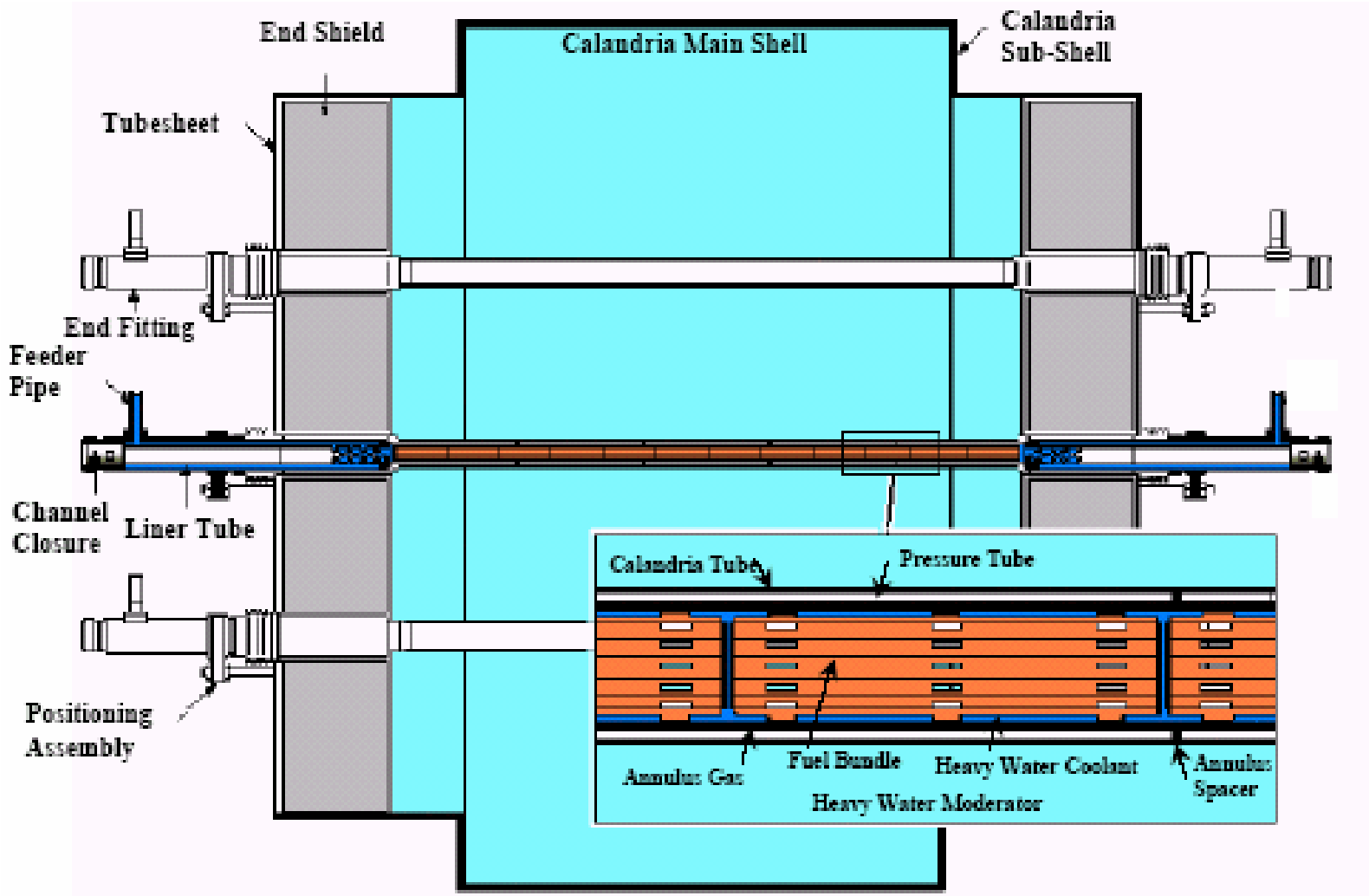

CANDU Plant
Typical CANDU Reactor Face

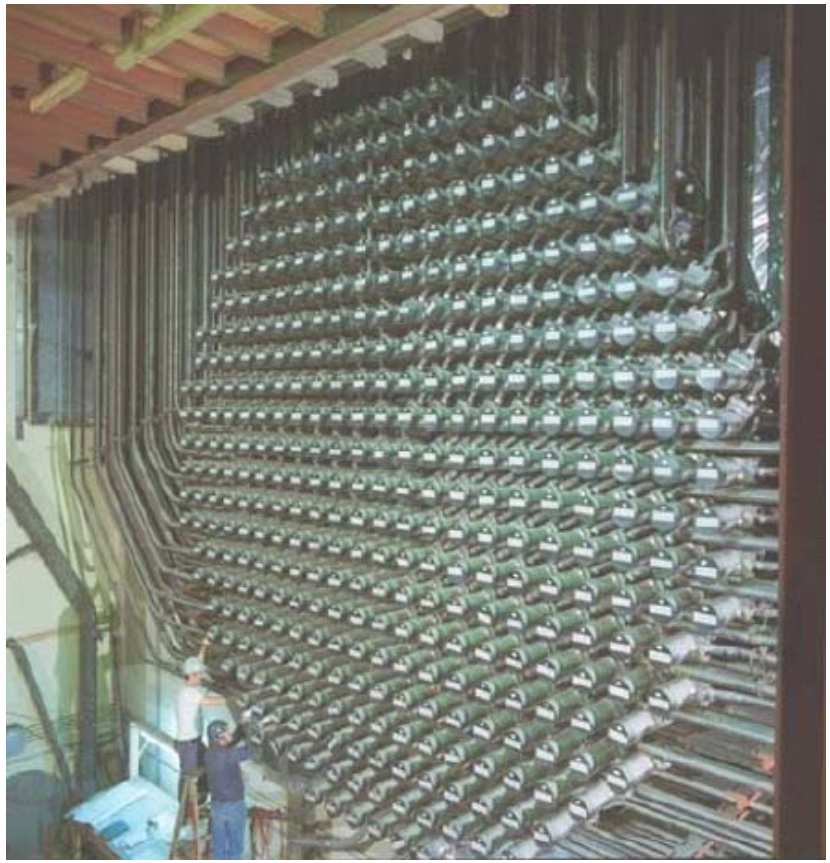

PHWR & PWR
Reactor Assembly

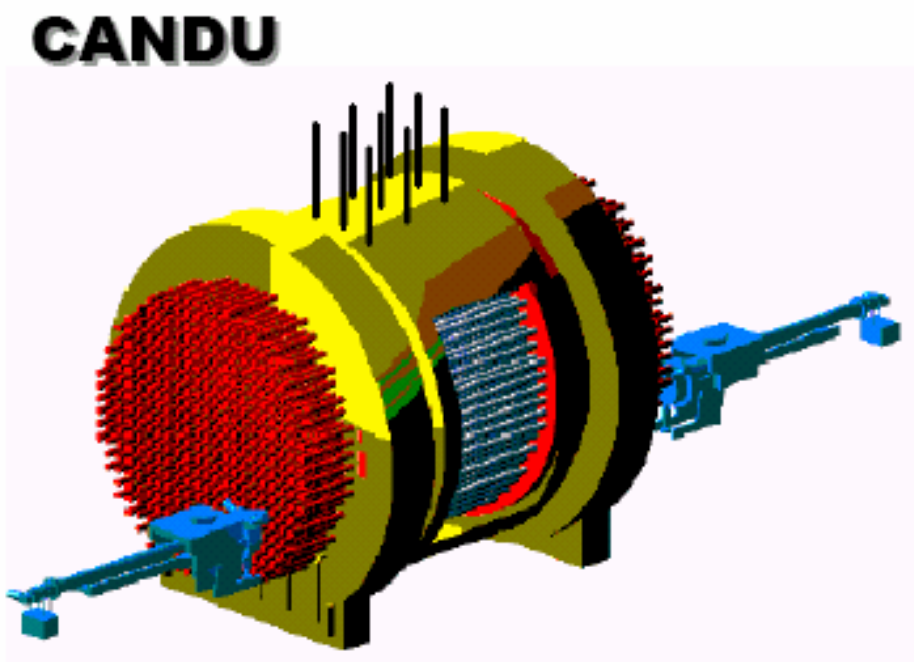

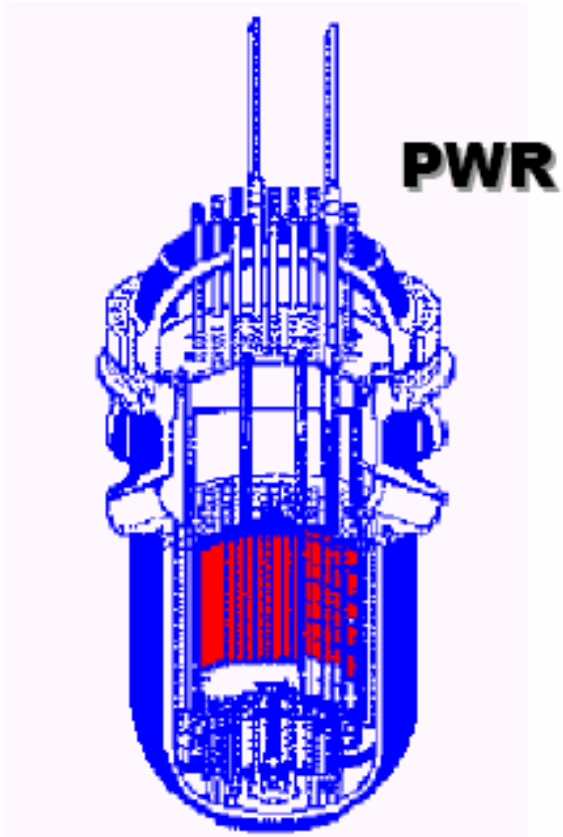

Advanced CANDU Reactor ACR-700

- Builds on CANDU 6 design, project and operational experience
- Retained traditional CANDU features:
  - Modular horizontal fuel channel
  - Fuel bundle design
  - Low temperature, low pressure heavy water moderator
  - On-power fueling
  - Passive shutdown systems in low pressure moderator

Main ACR-700 New Design Features

- Main new features
  - Use of slightly enriched fuel (2%)
  - Light water coolant
  - Higher pressures of reactor coolant and main steam
  - CANFLEX fuel bundle
  - Passive safety features added (e.g. gravity supply of emergency feedwater)
  - Dry containment
  - Use of distributed control systems (DCS)

Comparison CANDU 6 vs. ACR-700

Parameter	CANDU 6	ACR-700
Number of Fuel Channels	380	284
Coolant	D2O	H2O
Moderator	D2O	D2O
Calandria Diameter, m	7.6	5.2
# of Bundles/Channel	12	12
Thermal Output, Mwt	2064	1982
Electrical Output, Mwe	728	731
Bundle type	37-element	43-element CANFLEX
Enrichment, wt% U-235	0.71 %	2.1

ACR-700 Reactor Size vs. other CANDU reactors

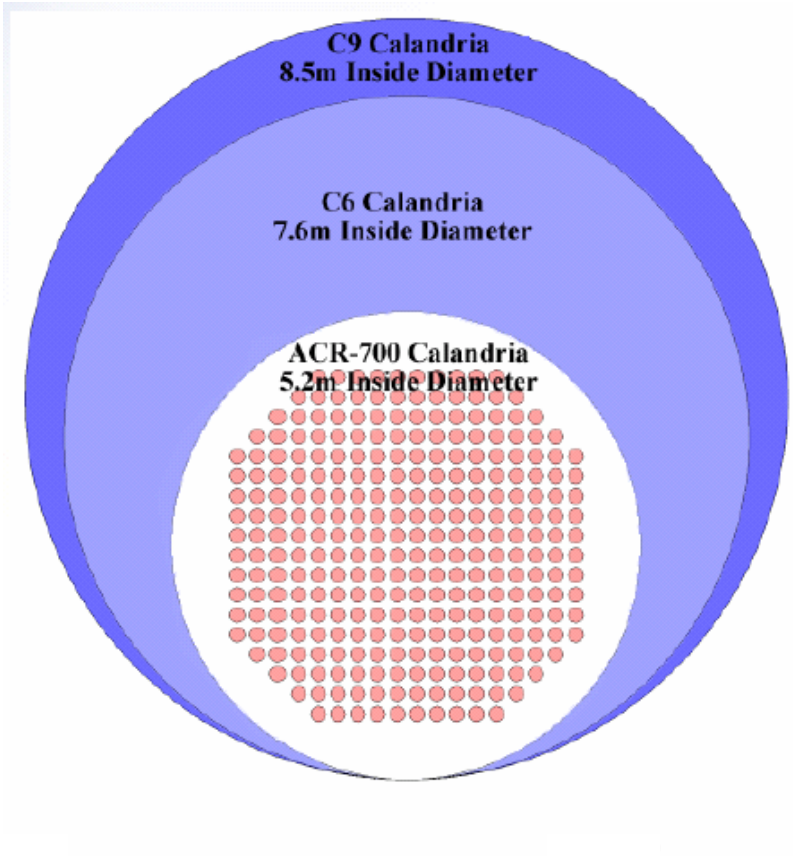

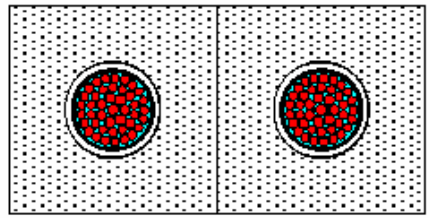

NU CANDU

Lattice Pitch = 28.58 cm (11.25")
PT O.R. = 5.6 cm (2.2")
CT O.R. = 6.6 cm (2.6")
VM / VF = 16.4

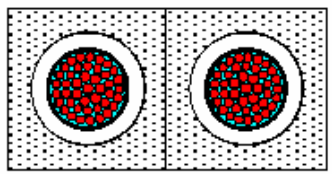

ACR-700

Lattice Pitch = 22.0 cm (8.7")
PT O.R. = 5.6 cm (2.2")
CT O.R. = 7.8 cm (3.1")
VM / VF = 7.1

Pg 20

CANDU Fuel Bundle

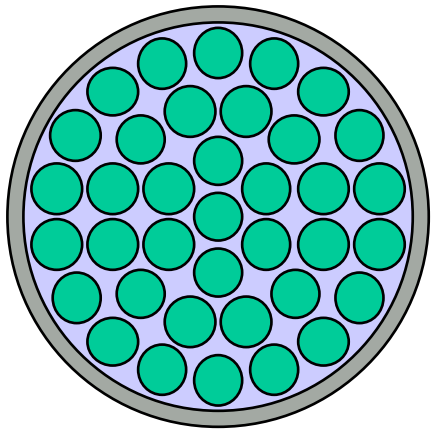

CANDU 6
37-element
fuel bundle

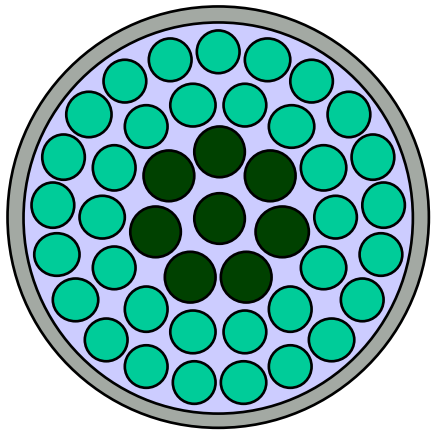

ACR-700
43-element
fuel bundle

ACR-700 Reactor Coolant System

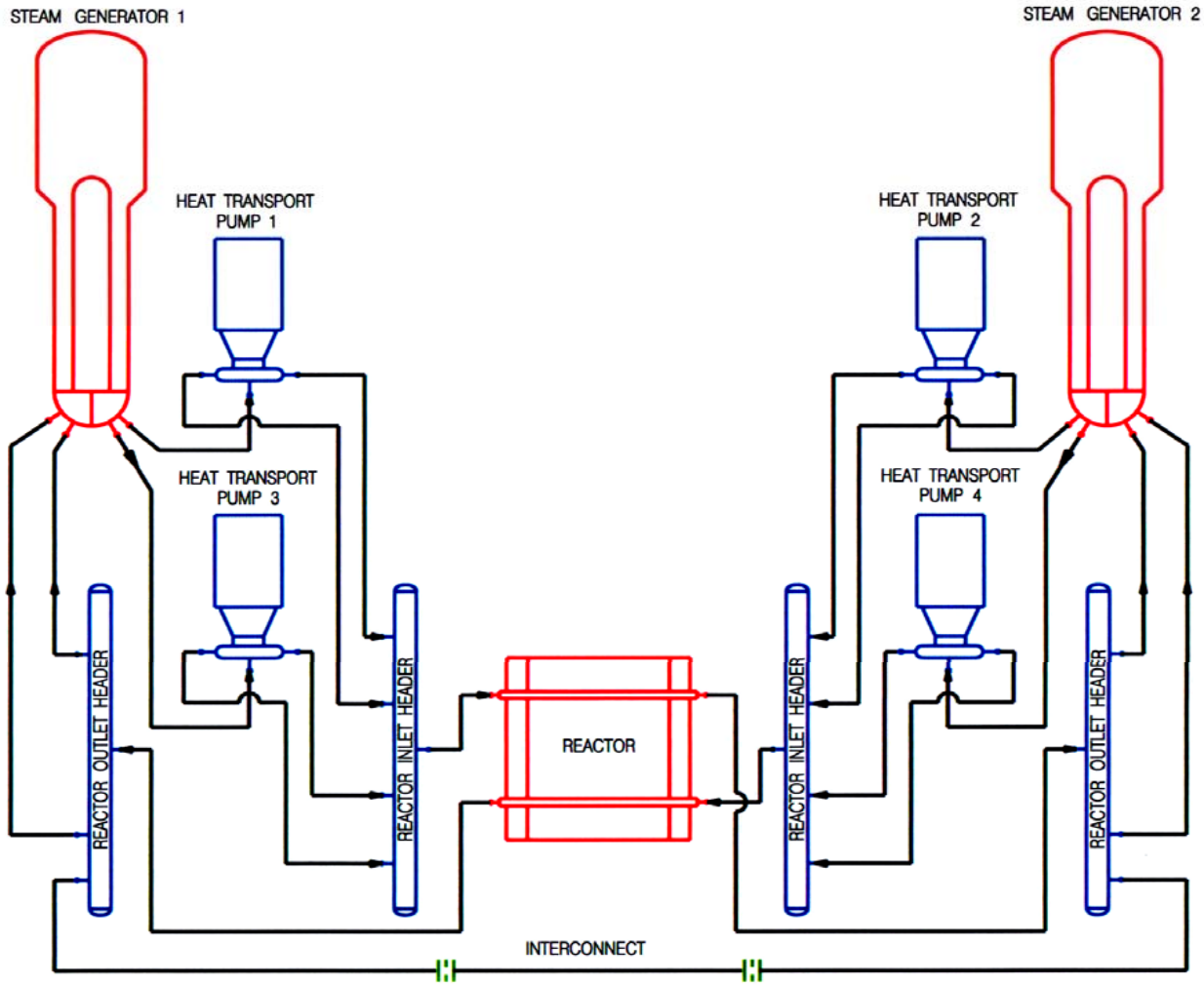

ACR-700 Reactor Coolant System

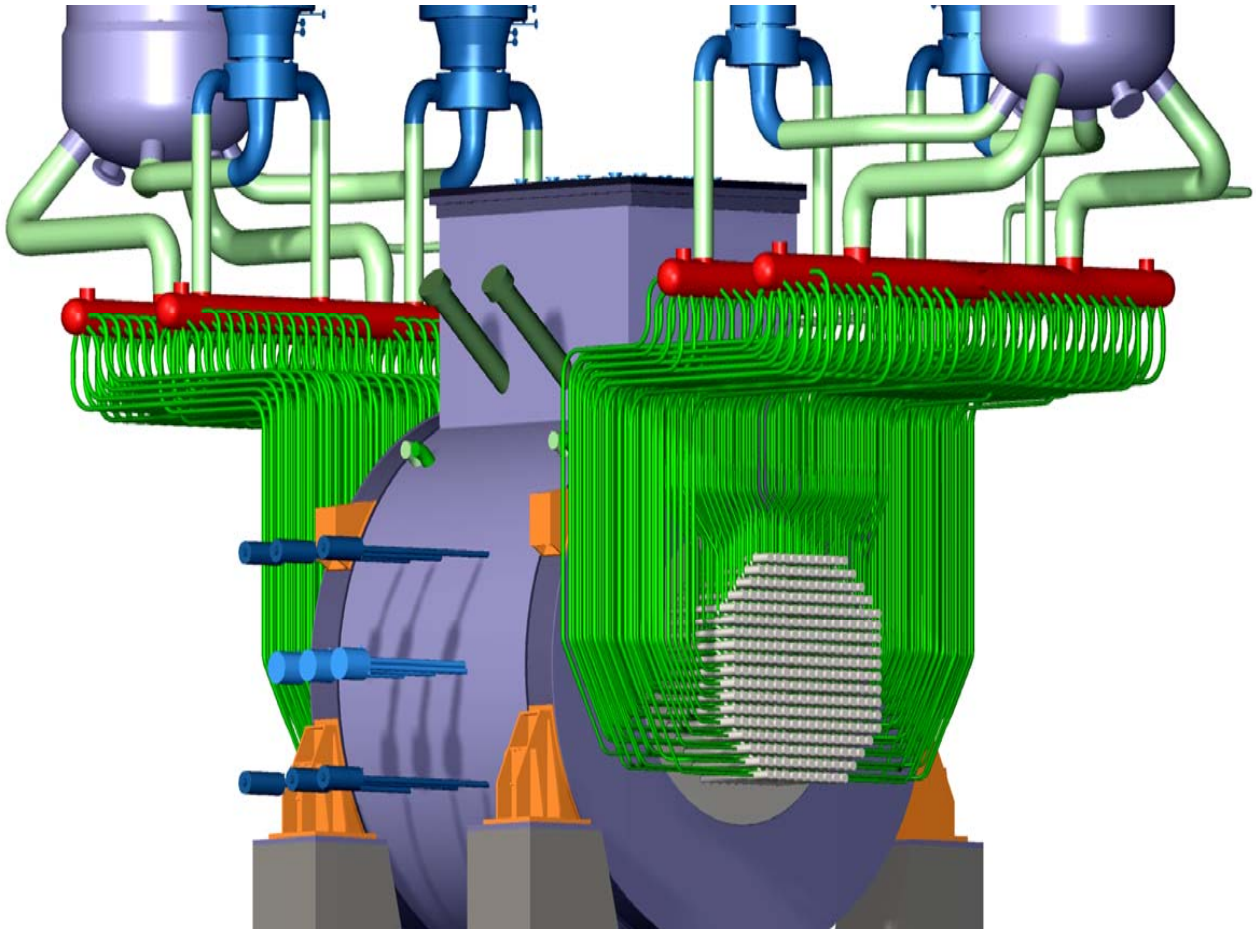

CANDU 6 Control Systems

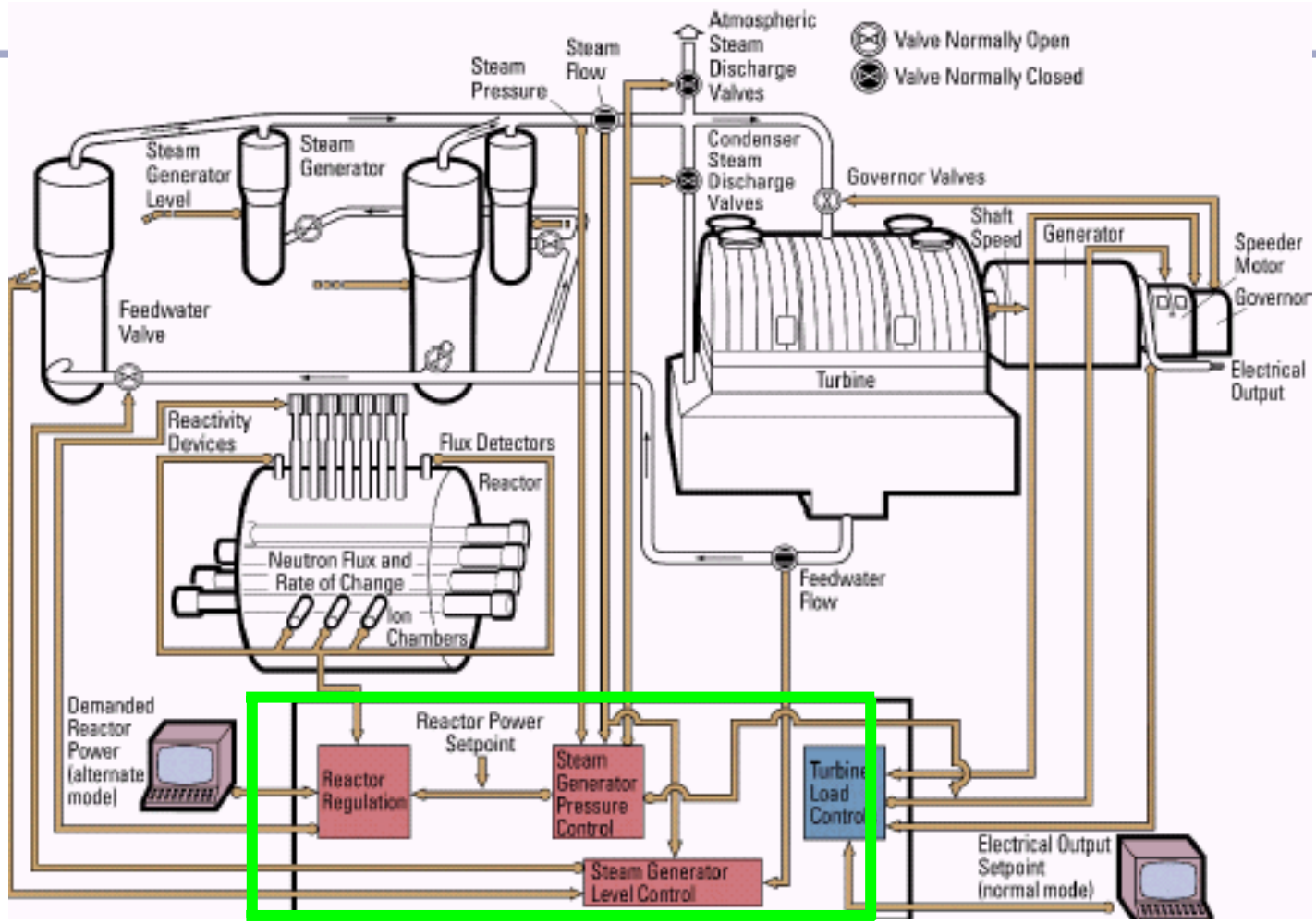

CANDU Control Systems
Reactor Regulating System

- Manoeuvres reactor power according to specified setpoints
- Provides rapid power reduction during serious plant upsets
- Responds to operator's requests (power changes and shutdown)
- Action normally initiated by digital control computer (DCC)

Reactor Regulating System Reactivity devices

- Zone controllers – cylindrical tanks which can be filled or emptied with light water
- Adjuster rods – can only be driven slowly
- Mechanical control absorbers – driven slowly or dropped
- Shutoff rods – driven out (by the RRS)
- Liquid poison – added to the moderator
- Refueling

- ACR-700:
  - no adjusters
  - H2O zone controllers are replaced by solid control assemblies

Plant Control and Monitoring

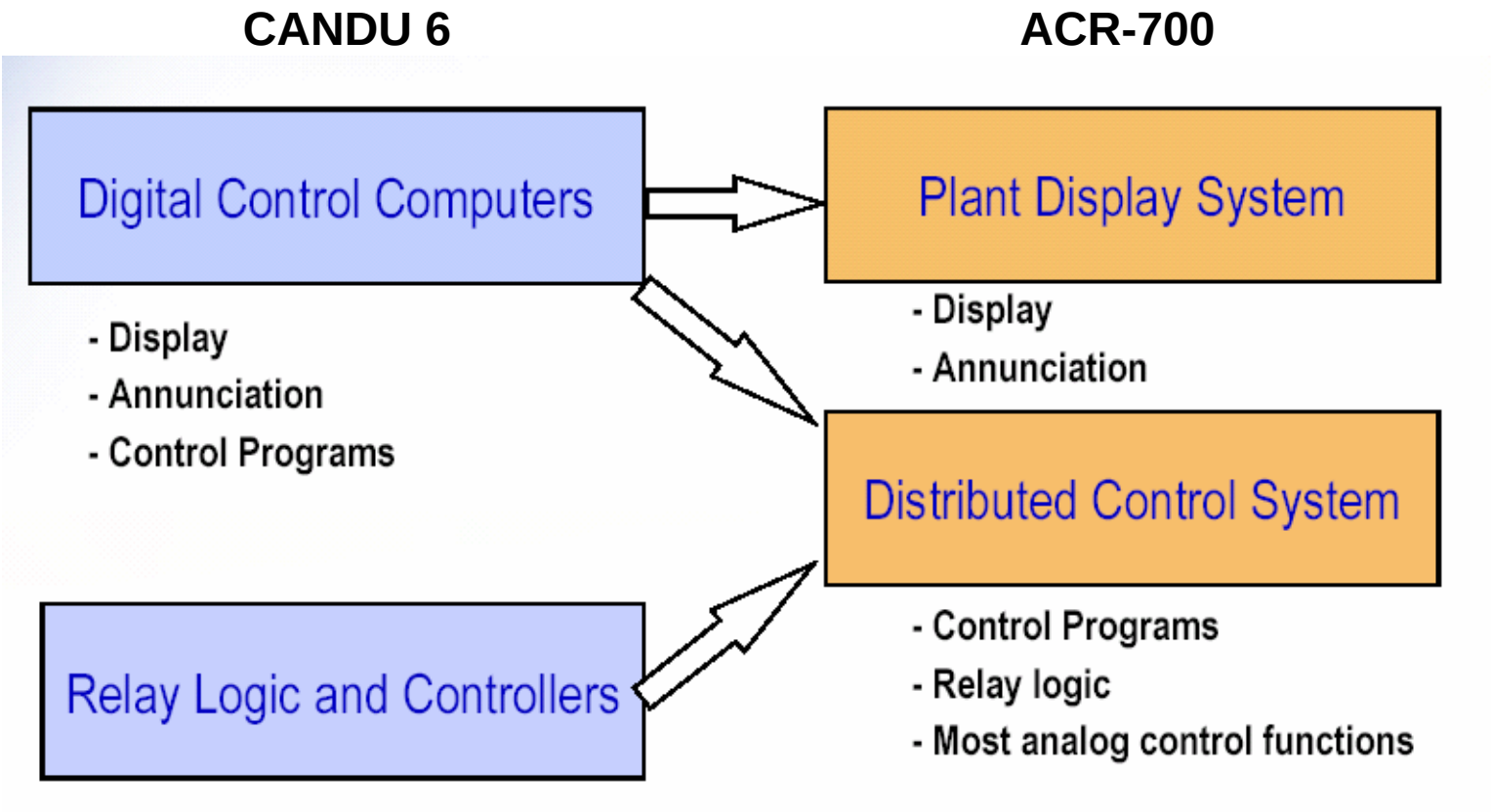

CANDU Control Centers

- Main Control Room (Group 1)
  - Controls and setpoints
  - Primary control of process and safety systems for all DBEs
  - Testing of safety systems
  - On-line refueling

- Secondary Control Area (Group 2)
  - Separated from MCR
  - Required when MCR becomes uninhabitable
  - Controls provided for safety shutdown, heat sink and monitoring of essential safety functions

ACR-700
Location of Control Centres

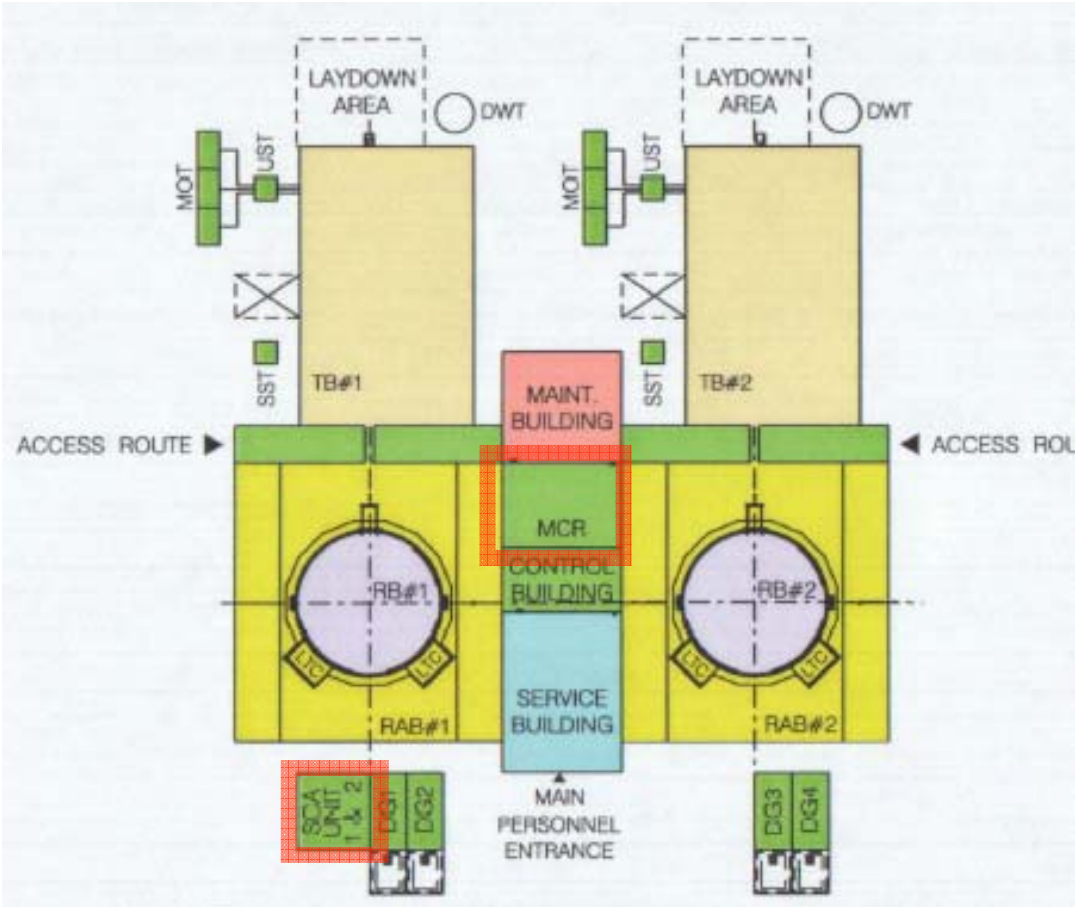

CANDU On-Line Refuelling

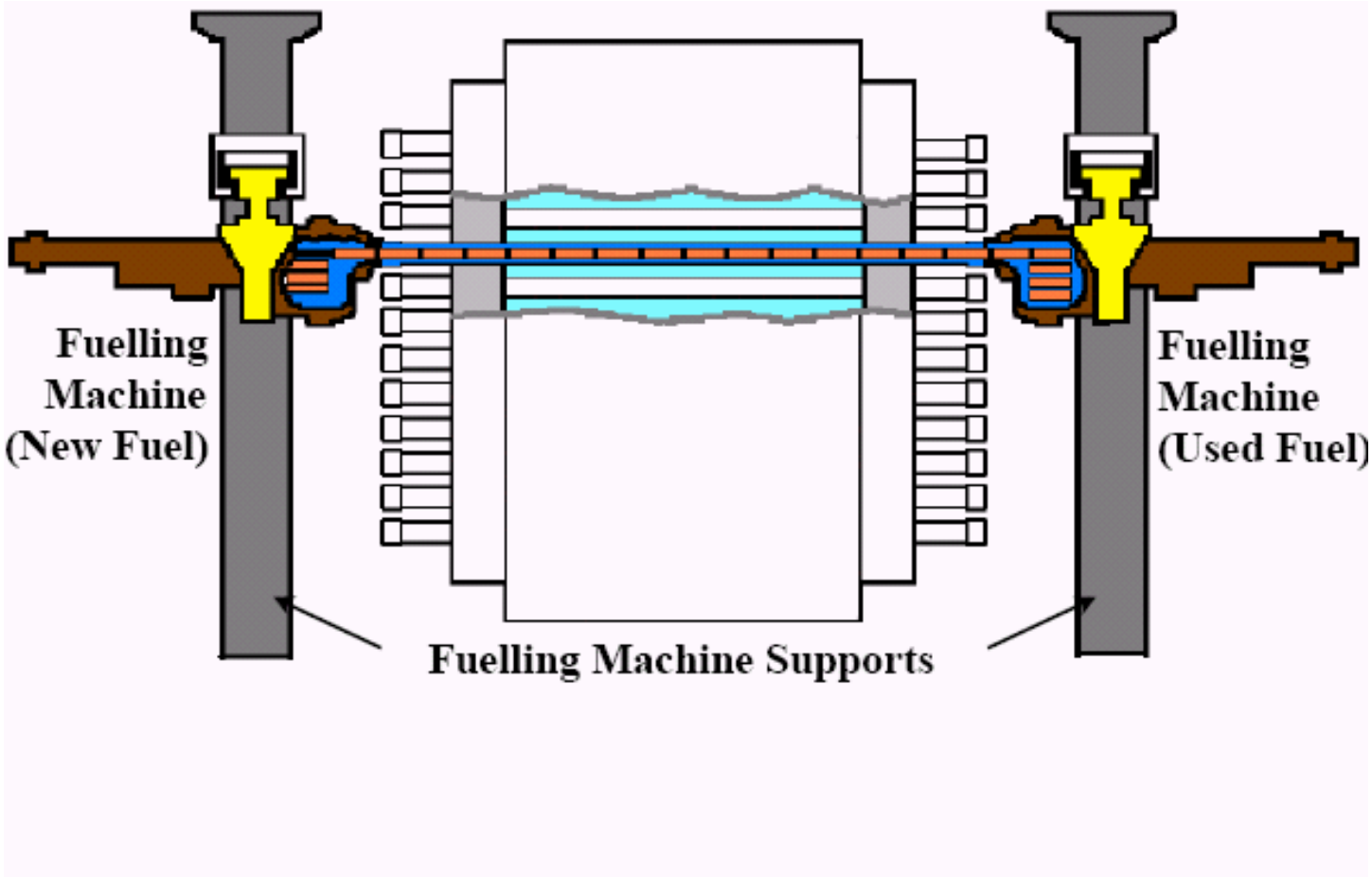

CANDU 6 Electrical Systems

- 4 classes of power according to availability requirements:
  - Class I – Uninterruptible DC for essential auxiliaries, control, protection and safety equipment
  - Class II - Uninterruptible AC for essential auxiliaries, control, protection and safety equipment
  - Class III – AC to essential auxiliaries that can tolerate short duration power outages
  - Class IV - Normal AC to auxiliaries and equipment which can tolerate long duration interruptions
  - EPS (emergency power system) – backup for Group 2 safety systems

ACR-700 Electrical Systems

- Classes I, II and III are now seismically qualified
- No Emergency Power System (EPS)

Electrical Systems
Odd end Even concept

- All voltage levels divided into odd and even buses
- Loads connected such that half of power to a process is supplied from odd bus and other half by even bus
- Separation requirements between odd and even systems (raceways, JB's, etc)

Design Basis Events
CNSC C-6 Guide

- C-6 Guide for the Safety Analysis of CANDU Nuclear Power Plants
  - Provides guidelines for developing a safety analysis report for CANDU plants
  - Establishes a "safety goal"
  - Covers practices and performance criteria for safety analysis
  - Not mandatory

Design Basis Events
CNSC C-6 guidelines

- C-6 uses five classes of events based on likelihood
- Initiating events are generally included for Class 1, 2 & 3:
  - Class 1: control failures, normal electrical power failures, ….
  - Class 2: small loss of reactor primary coolant, ….
  - Class 3: large loss of reactor primary coolant, ….
  -
- Class 4 and 5 generally include combinations of events, in particular combinations of initiating events and total failure of a safety system

CNSC C-6 Radiological Dose Limits

	Event Class				
	1	2	3	4	5
Effective Dose (mSv)	0.5	5	30	100	250
Lens of the eyes (mSv)	5	50	300	1000	1500
Skin (mSv, averaged over 1 cm^2)	20	200	1200	4000	5000

CNSC C-6 Radiological Dose Limits
Effective Dose

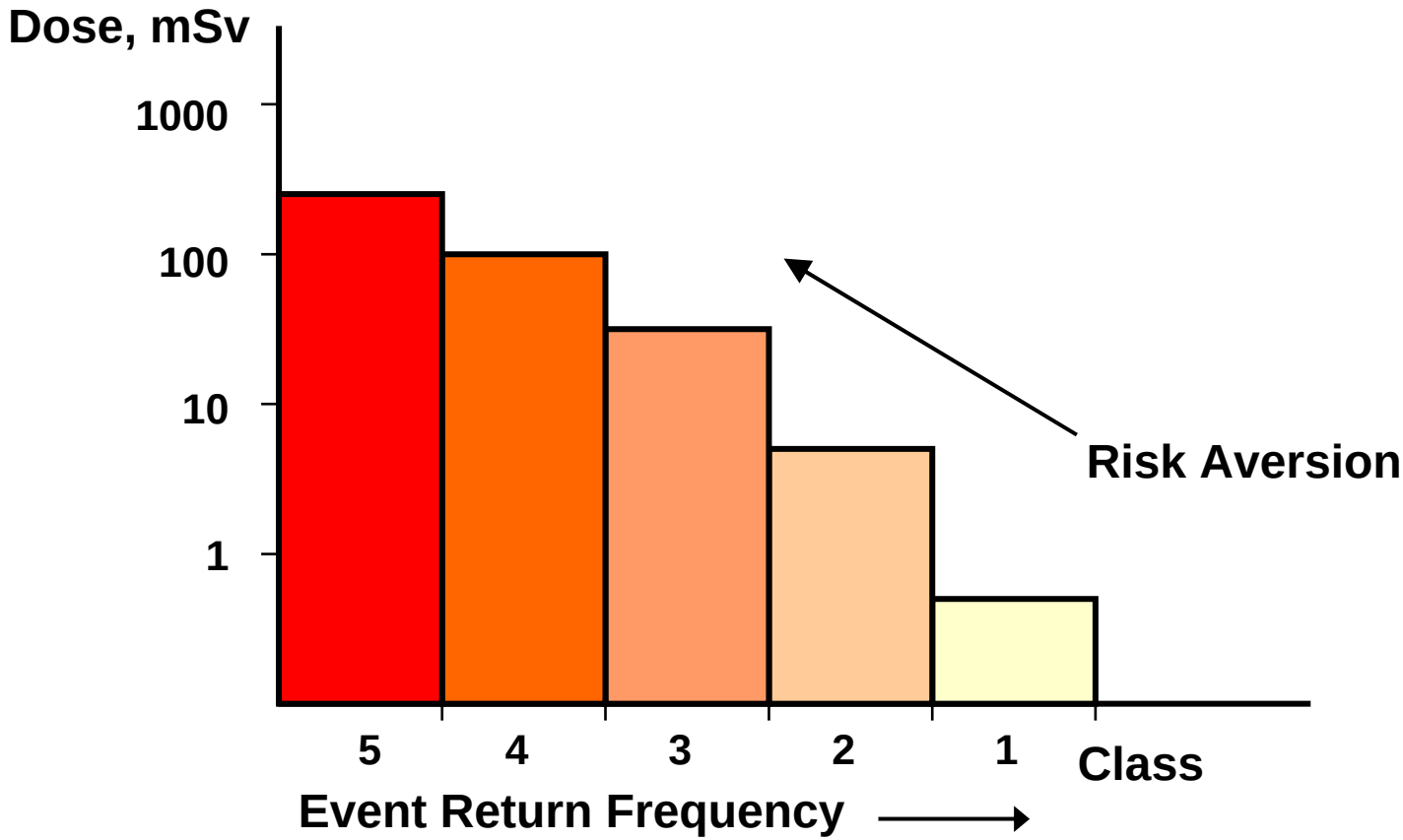

C-6 Design Basis Events
Examples of Class 1&2 Events

- **Class 1:**
  - **Loss of Pressure and Inventory Control**
  - **Loss of Secondary Circuit Pressure Control**
  - **Loss of Reactivity Control**
  - **Total Loss of Class IV Power**
  - **Single RCS Pump Trip**
  - **Loss of feedwater flow (e.g. pump trip)**

- **Class 2:**
  - **Single Steam Generator Tube Rupture**
  - **Pressure Tube Failure (calandria tube intact)**
  - **Small LOCA**
  - **Feedwater Pipe Break**

C-6 Design Basis Events
Examples of Class 3 Events

- Large LOCA
- Main Steam Line Break (inside containment)
- Pump seizure
- Pressure Tube/Calandria Tube Failure
- Multiple steam generator tube failures

C-6 Design Basis Events
Examples of Class 4&5 Events

- (rare event + loss of safety function)
  - Feedwater Line Failure + loss of ECCS
  - Partial Channel Flow Blockage + loss of ECCS
  - Small LOCA + loss of dousing
  - Large LOCA + failure of containment isolation
  - Large LOCA + loss of ECCS

- Design Basis Tornado
- Turbine Breakup

C-6 Design Basis Events
Example of Performance Criteria

	Large LOCA (DBE) Performance Criteria
Fuel Integrity	No fuel centerline melting No cladding melting Limit oxygen embrittlement, etc
Fuel Channel Integrity	No channel failure No widespread PT ballooning
Containment	Peak pressure not to exceed design pressure
Hydrogen	Concentration below flammability limit

Safety Functions
CNSC fundamental requirements

- Plant must perform the following functions (CCCM):
  - Shutdown the reactor (Control)
  - Remove decay heat from fuel (Cool)
  - Contain radioactivity releases (Contain)
  - Provide post-accident monitoring (Monitor)
- Functions above are performed by special safety systems (protective systems) and other safety related systems

Two-Group Separation

- **Purpose: to ensure that common-cause events will not prevent plant from performing required safety function**
- **Systems are grouped into 2 groups**
- **Groups are independent of each other and physically separated**
- **Systems in each group can provide the essential safety functions independent of the other group**

Two Group Separation

Group 1	Group 2
Shutdown System 1	Shutdown System 2
Emergency Core Cooling	Decay Heat Removal
Service Water	Containment
Main Control Room	Secondary Control Area
Raw Cooling Water	Emergency Power
Reactor I&C	Emergency Water Supply

(Special) Safety Systems

- CANDU Special Safety Systems are:
  - Shutdown System No. 1
  - Shutdown System No. 2
  - Emergency Core Cooling System
  - Containment System
- Special Safety Systems must meet the requirements of CNSC regulatory documents R-7, R-8 and R-9

Special Safety Systems

- CNSC Regulatory documents R-7, R-8, R-9 require:
  - SSS be independent of each other in design and operation
  - SSS be independent from process systems
  - SSS have unavailability of 0.001
  - SSS perform their intended functions while subject to the most severe environmental conditions resulting from DBEs (EQ)
  - Status of equipment required for SSS actuation be monitored from the control room
  - Availability tests be performed to demonstrate compliance with availability requirements
  - (other)

CANDU Shutdown Systems

- SDS1 is separate and diverse from SDS2
  - design based on different physical principles
    - SDS1: Dropping of mechanical shutoff
    - SDS2: Injection of gadolinium nitrate
  - independent sensors
  - diverse hardware
- Each system covers the whole spectrum of design basis events

CANDU 6 Shutdown Systems

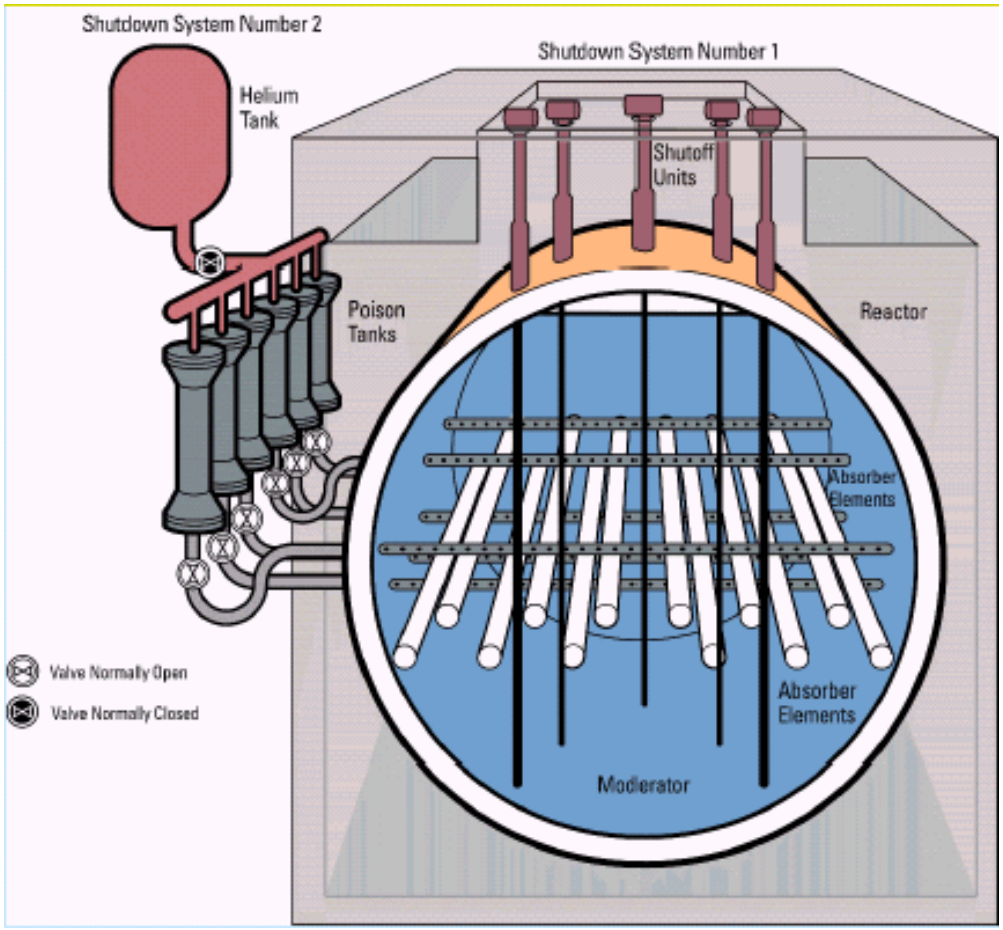

ACR-700 Shutdown System No. 2

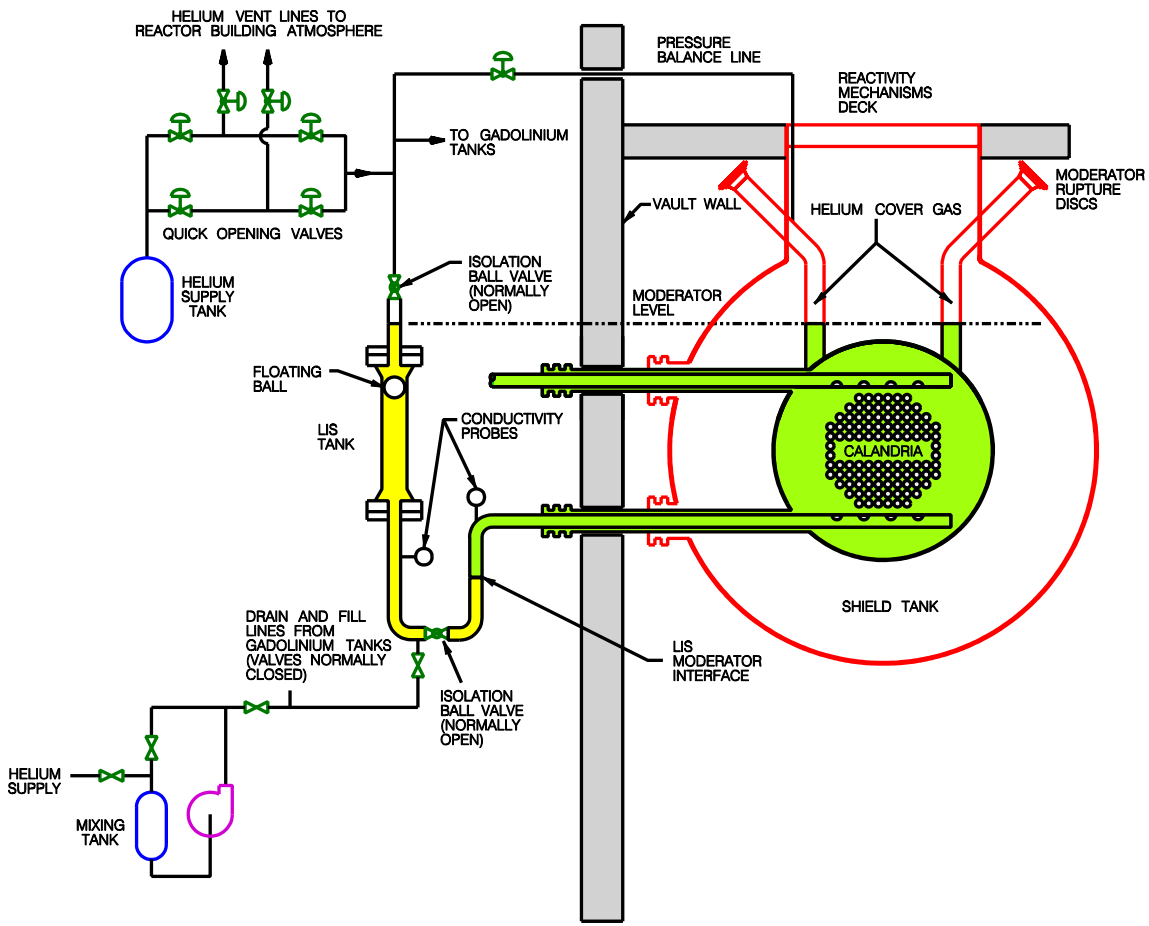

CANDU 6 Containment

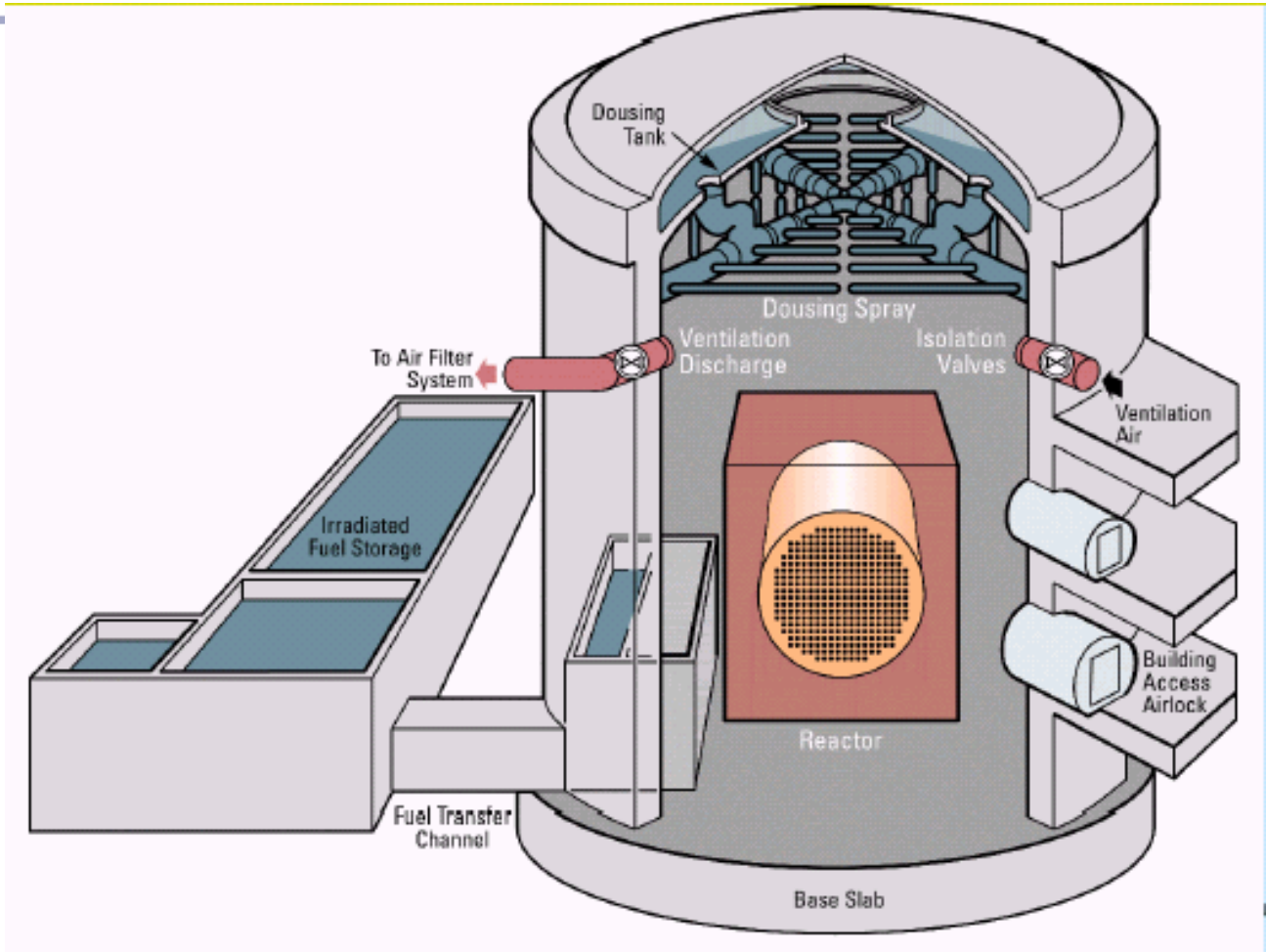

ACR-700 Containment

- Dry containment
- Steel lined pre-stressed concrete structure
- Reserve Water System provides back-up water supply to several systems

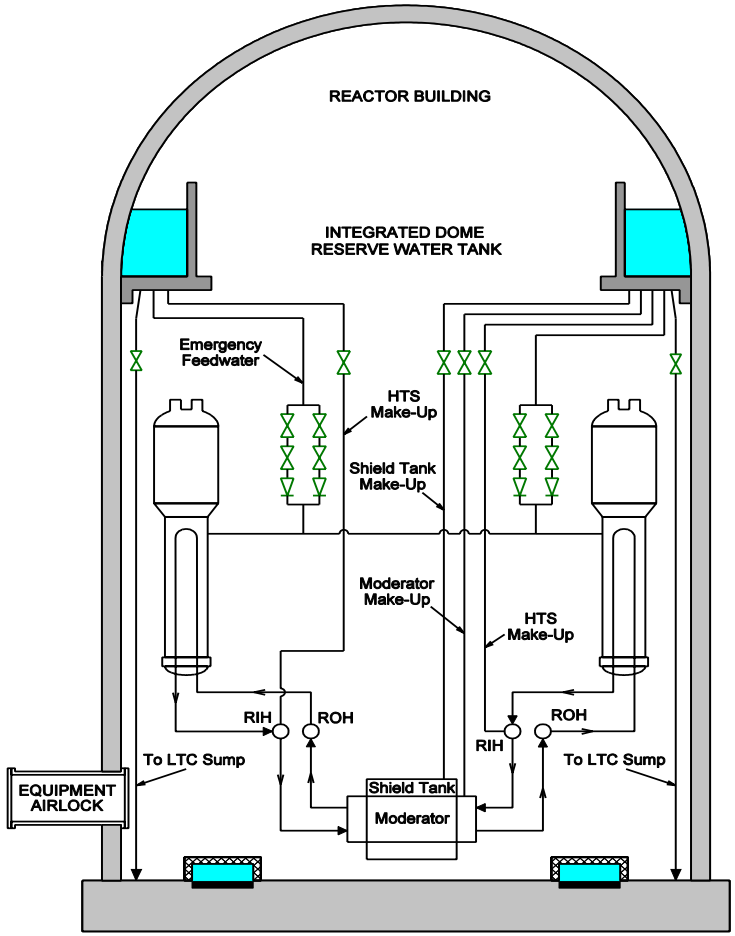

CANDU 6 Emergency Core Cooling

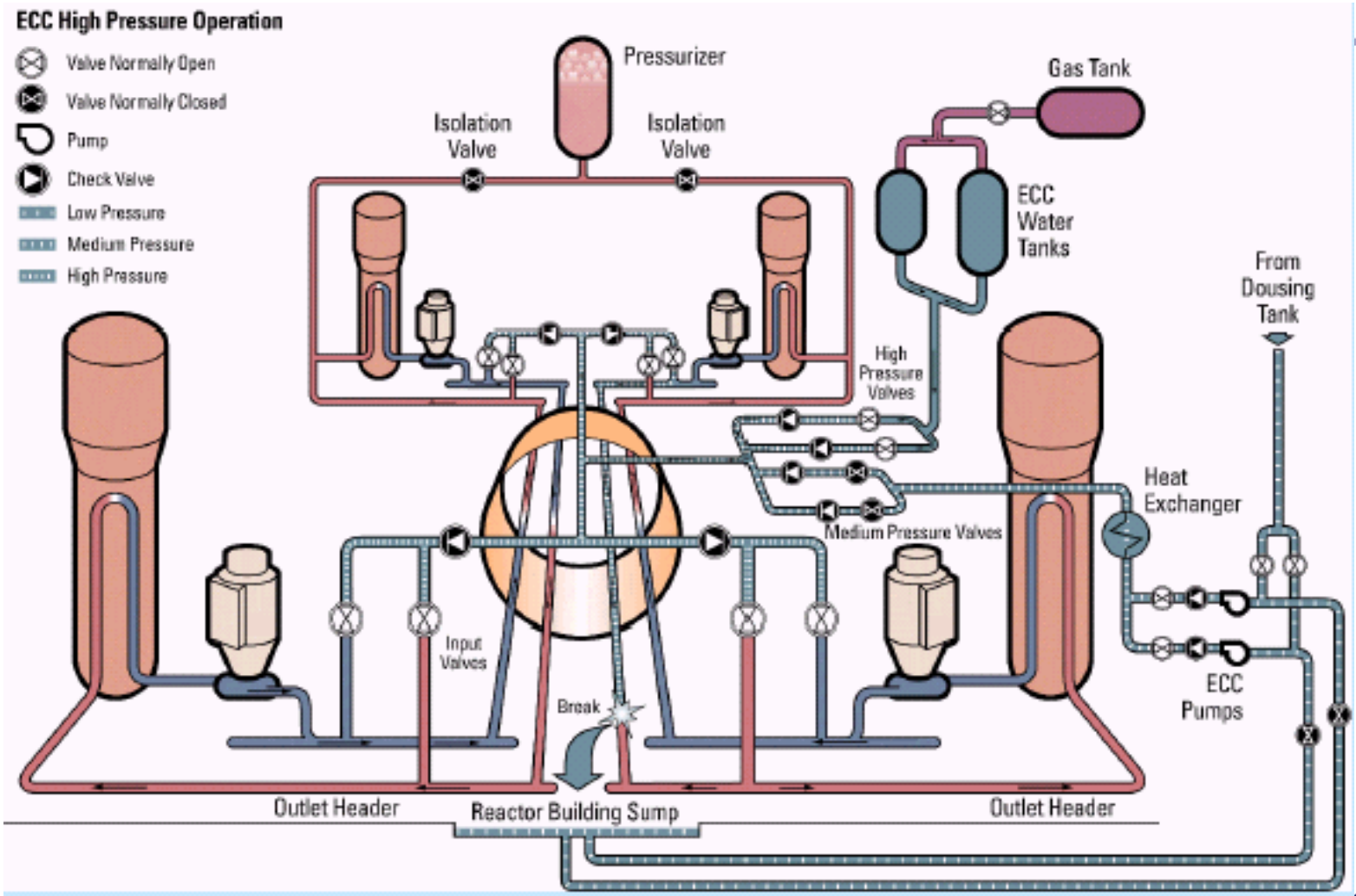

ACR-700 ECCS
Passive Injection Phase

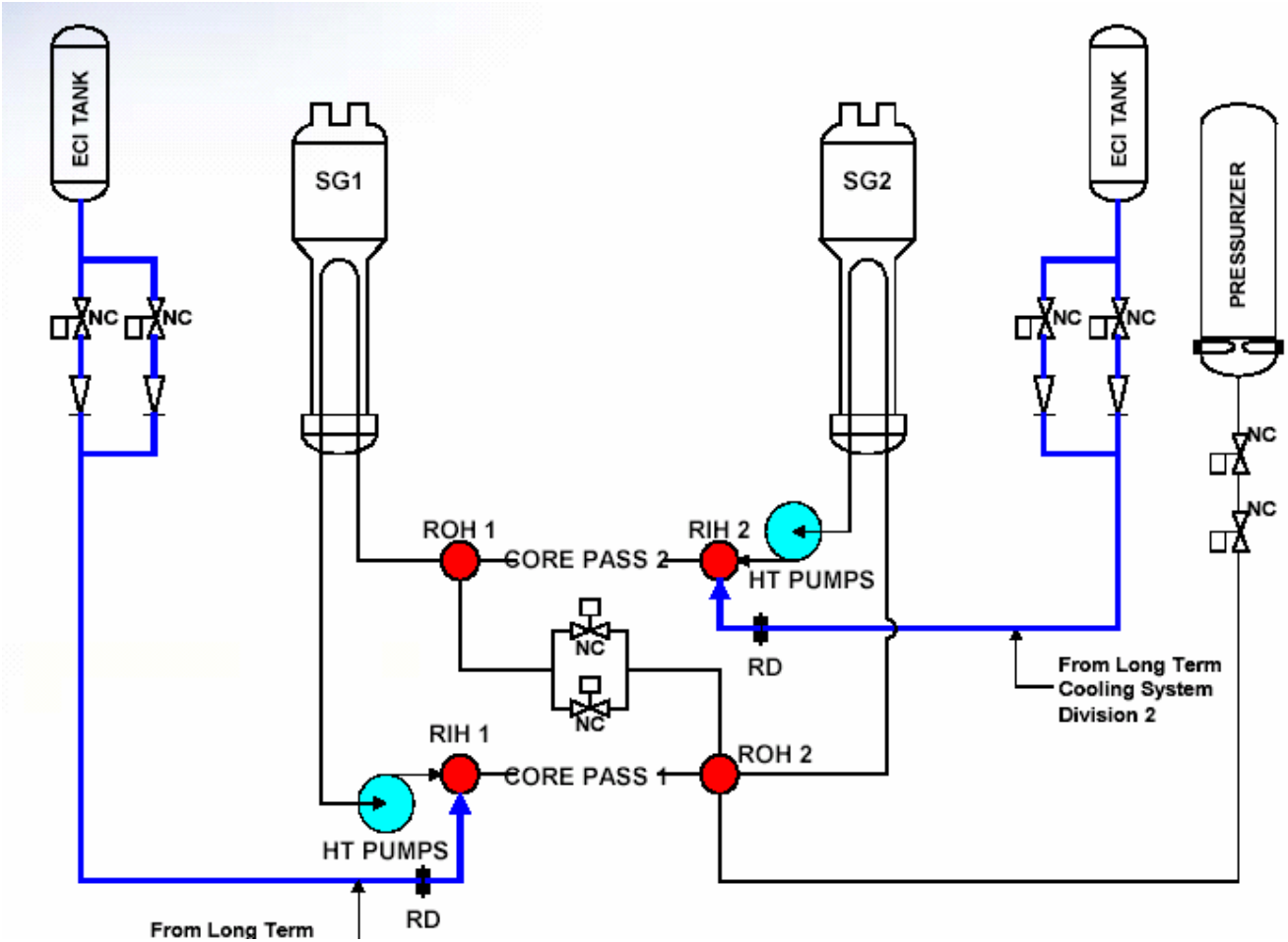

ACR-700
USNRC Pre-Application Review

- http://www.nrc.gov/reactors/new-licensing/license-reviews/design-cert/acr-700.html