Design of a New Operating Mode for Voltage Regulator Controls in a Smart Distribution System

Dr. Murty V.V.S. Yalla, IEEE Fellow
President

BECKWITH ELECTRIC CO.INC.

6190 118th Ave. N.
Largo, FL
myalla@beckwithelectric.com

IEEE
REPC 2017 COLUMBUS

Introduction

- Voltage Regulators for distribution voltage regulation
- Reverse Power Operating Modes
- Simulation of a Voltage Regulator with two sources
- Radial Feed with Feeder reconfiguration along with DG
- Smart Reverse Power Operating Mode for voltage regulators
- Conclusion

Reverse Power Operation of Voltage Regulators

- **When reverse power is detected, the Regulator control has to determine the mode of operation.**
- **If the reverse power is due to line switching, where the distribution feeder is being fed from the opposite end, then the raise and lower outputs must be reversed and the voltage on the source side must be used (measured or calculated). Otherwise, the Regulator will go to the extreme taps (+16 or -16), causing very high or low voltage.**
- **If the reverse power is due to a small DG, then the Regulator must regulate normally, without reversing raise and lower outputs, as the small DG will not be able to regulate the feeder voltage.**

Reverse Power Operating Modes

- **Ignore or Regulate in Forward: The control will take the same action as in the forward direction.**
- **Block: The control will cease all tapchange operations as long as the power is in the reverse direction and will stay in the present tap position.**
- **Regulate in Reverse: The control will use the source-side voltage (load-side in reverse operation), use the reverse direction settings and operate the taps correctly to control the source-side (now load-side) voltage.**
- **Distributed Generation (DG): This mode of operation is the same as the Ignore mode, except when line drop compensation (LDC) is used. With LDC, a separate set of LDC settings can be specified which will be applied during reverse power.**
- **Run to Neutral: The "run to neutral" operation is included as an alternate operation option for use when different system conditions, which are not locally distinguishable, could cause reverse power flow.**
- **Smart Reverse Power Mode: The control will automatically determine the best choice (DG or Regulate in Reverse) based on the change in voltage, to a call for a raise or a lower of the tap position.**

Simplified Model

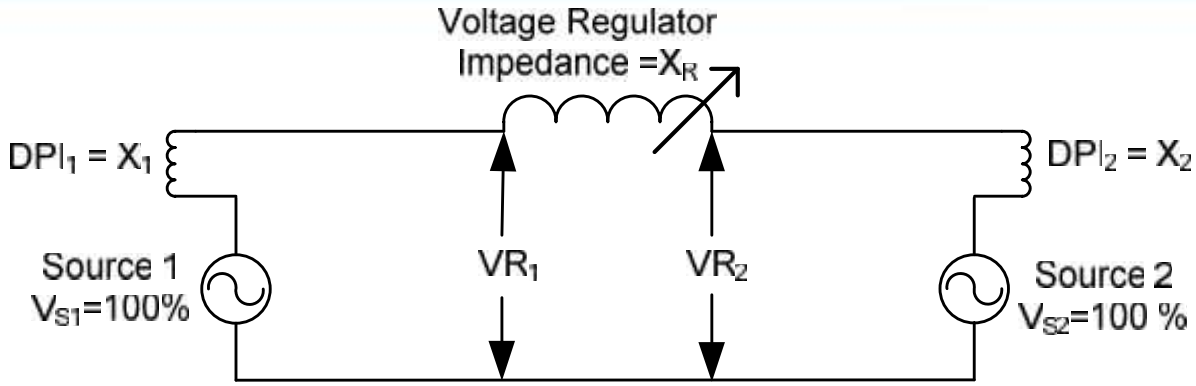

Fig. 1. Simplified system model with two sources connected on both sides of a voltage regulator

$$VR_1 = 100\% - X_1 . \left(\frac{\Delta V}{X_1 + X_R + X_2}\right) \quad (1)$$

$$VR_2 = 100\% + X_2 . \left(\frac{\Delta V}{X_1 + X_R + X_2}\right) \quad (2)$$

ΔV = 0.625% for one tapchange.
X_R = 0.05% (when tap position is at 1R)

Simulation Results

Case #	DPI_1	DPI_2	Reactive Current (I_X) through the regulator	VR_1	VR_2
1	2%	∞	0	100%	100.625%
2	∞	2%	0	99.375%	100%
3	2%	20%	2.83 %	99.94 %	100.56%
4	20%	2%	2.83 %	99.43 %	100.053%
5	2%	2%	15.4 %	99.69%	100.31%

Radial Feed with Feeder Reconfiguration

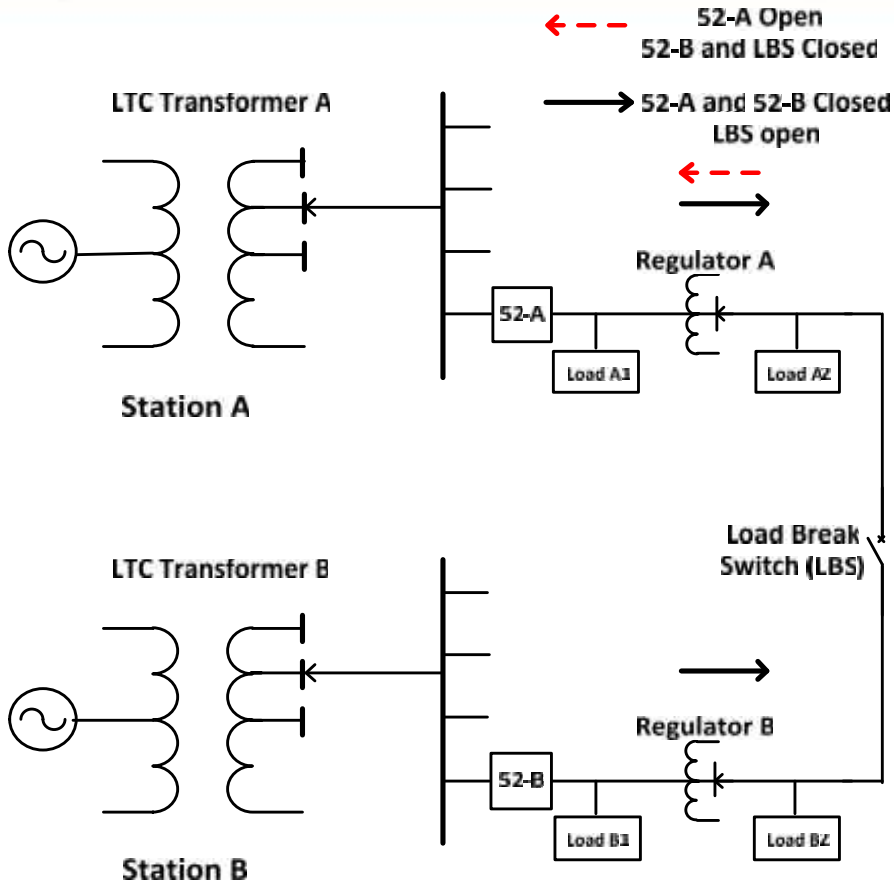

The control must be able to reliably determine all of the following for proper operation:

- the direction of the power flow
- the tap position for impedance and voltage calculations
- the magnitude of the "source" side voltage for regulation.

This operational mode selection is generally named "Reverse Regulation."

Radial Feed with DG

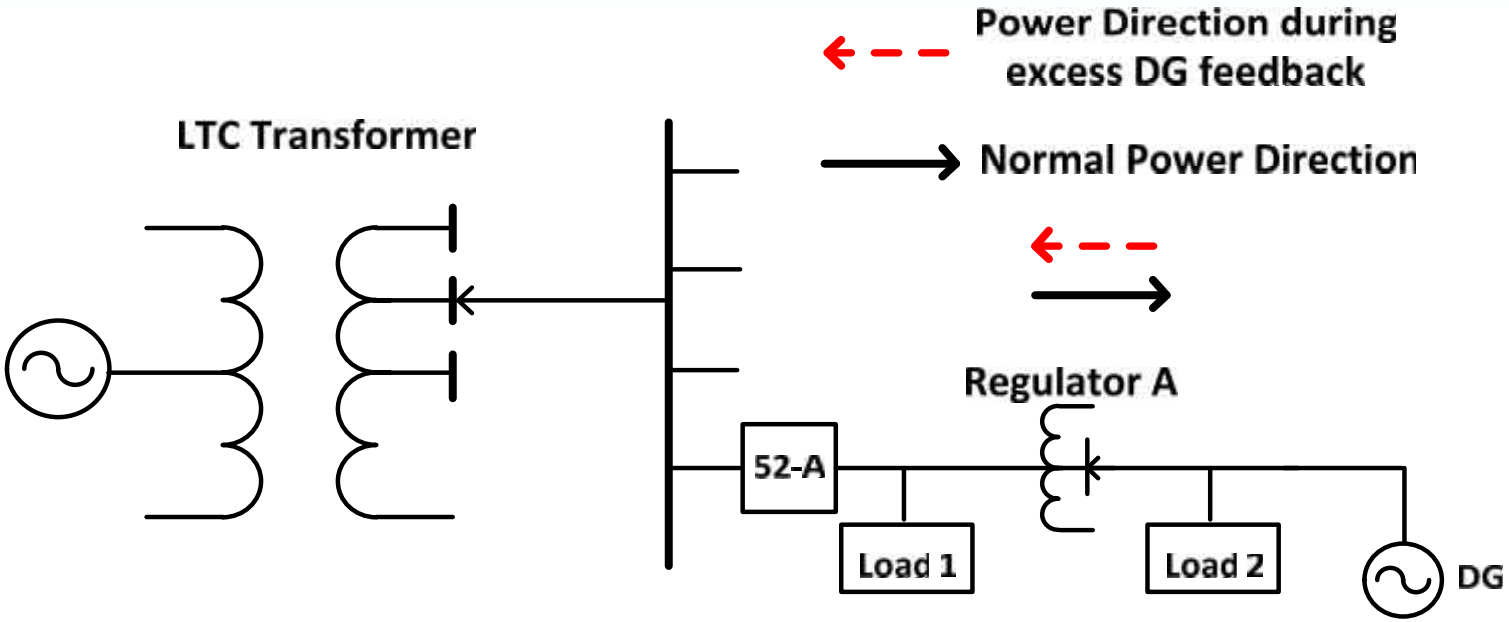

The most desirable operation of the regulator, in this application, is to ignore (ignore mode or DG mode) the power reversal and continue to regulate the voltage from the stronger utility system.

Feeder Reconfiguration along with DG

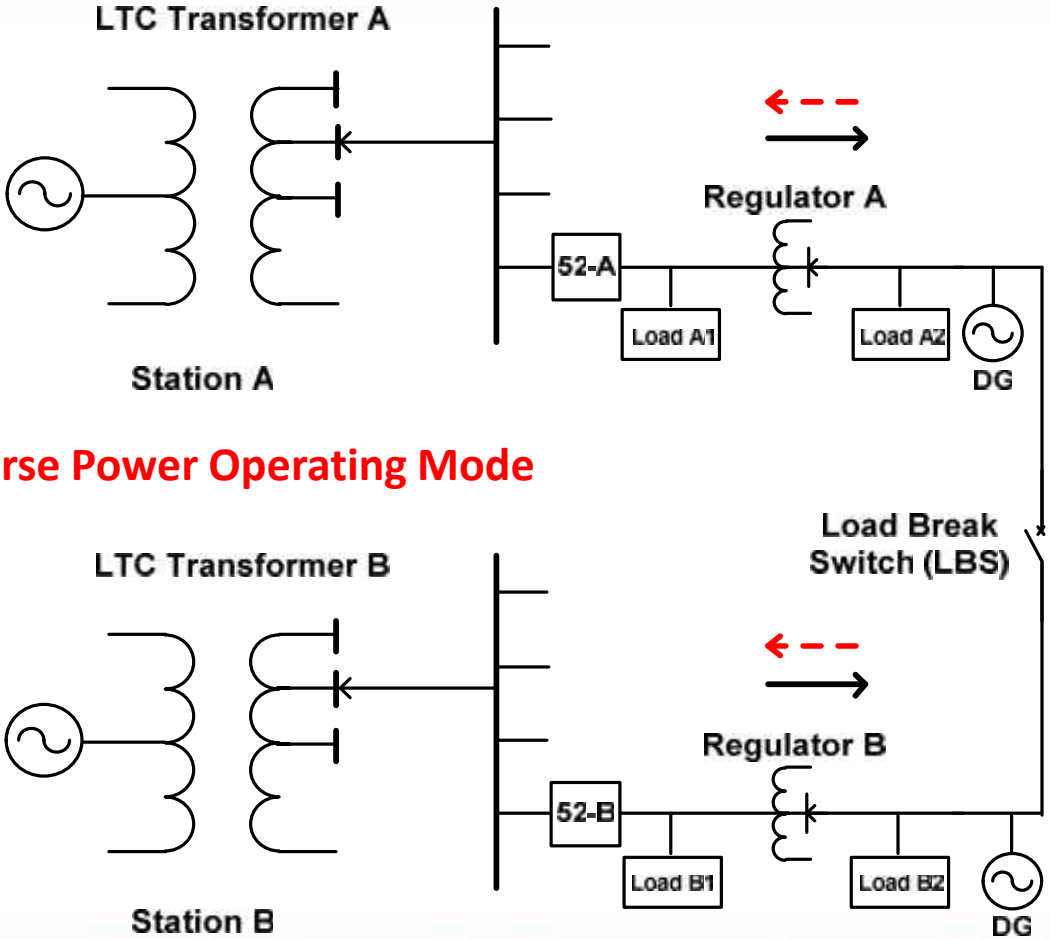

The new Smart Reverse Power Operating Mode

Smart Reverse Power Mode

- **When reverse power is detected, the mode of operation is set initially to "DG" mode.**
- **Then a delta voltage is measured at each tapchange as follows:**

  Delta Voltage = (Measured load side voltage just before a tap operation – Measured load side voltage one second after the tapchange operation)

- **If the measured Delta Voltage is greater than 50% of the expected value (0.3125%), then the Smart Reverse Power mode will keep the mode of operation as "DG" mode.**

Smart Reverse Power Mode (cont.)

- **If the Delta voltage is less than 0.3125% for two consecutive tapchanges, then the Smart Reverse Power mode sets the reverse power mode of operation to "Reverse Regulate" mode.**

"Smart Reverse Power Mode" will ensure that the regulator will not run away when different operating conditions can cause reverse power by adaptively selecting the best operating mode based on the prevailing conditions.

Field trials of the new Voltage Regulator Control mode

- **The new control mode of operation has been tested in the field at an electric power company in the southeastern United States.**
- **The performance of the new operating mode was evaluated by creating various scenarios.**
- **These field trials were conducted on a feeder which has customer-owned solar generation. It was cloudy the majority of the time during the test.**
- **However, there were times when the sun appeared, and the solar generation exceeded the load, thereby causing a reverse power condition (the control correctly switched to DG mode).**
- **The end of the feeder also has an alternate source from another substation, and the feeder was switched to the alternate source to create a reverse power condition test (the control correctly switched to Reverse Regulate mode).**

Results of Field Trials

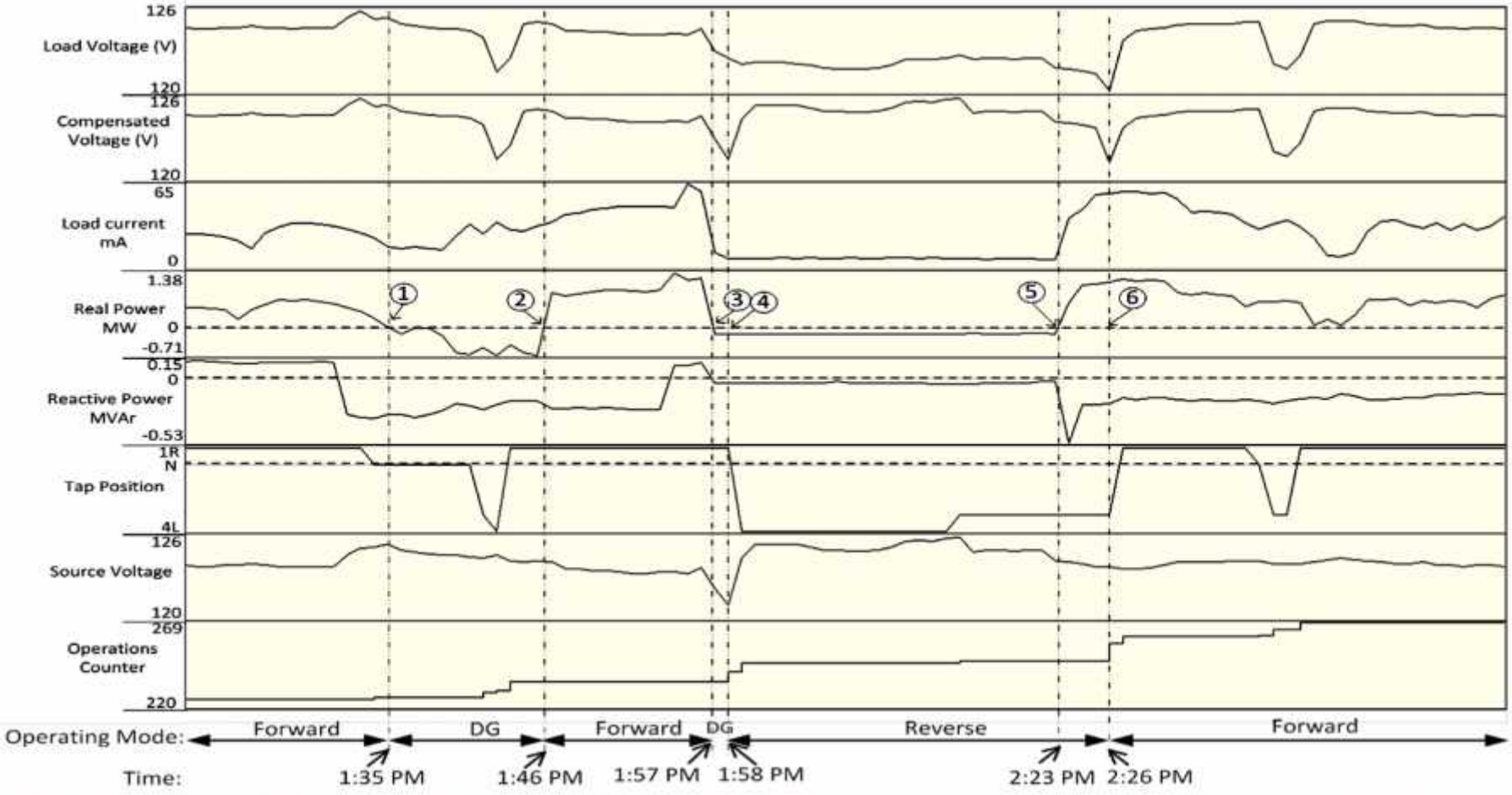

Conclusion

- **With high penetration levels of DG on the distribution system, it is becoming more common to have the voltage regulators deal with reverse power situations.**
- **When the DG is combined with Distribution Automation, where the feeder may be fed from the opposite end during line switching, the problem becomes complicated, as the control does not know the source (DG vs. Alternate Source) of reverse power.**
- **It is important to select the correct reverse power mode of operation for voltage regulators; otherwise, dangerously high or low customer voltage levels may result, causing customer equipment damage or misoperations.**

Conclusion (cont.)

- The load voltage changes as a result of a tapchange on voltage regulators and LTC transformers is not a function of power direction, but depends upon the relative driving point impedance (DPI_1 vs. DPI_2) of the two sources.
- This paper introduced a new Smart Reverse Power mode of operation for voltage regulators which will automatically select the best operating mode (either DG mode or Reverse Regulate mode) based on the change in voltage measured during a tapchange operation.
- The control can work standalone without any help from DMS/SCADA.
- The technique does not require the status of switches, reclosers and DG to be transmitted to voltage regulator controls.
- The new smart reverse power operating mode has been tested through field trials at an electric utility company and the results are reported.

Questions?

Dr. Murty V.V.S. Yalla, IEEE Fellow
President
BECKWITH ELECTRIC CO.INC.
6190 118th Ave. N.
Largo, FL
myalla@beckwithelectric.com

Thank you!