Electrical engineering considerations for cogeneration

Feb 2017-Technical Seminar Copyright IEEE 2017

Critical Aspects of Cogeneration Design

- Safety during construction, startup, operations and maintenance
- Reliability of steam and electricity outputs
- Economics
- Main system components:
  - Generator and excitation system
  - Connection to step up transformer: cable, cable bus or IPS
  - Step up transformer (GSU)
  - Switchgear/ bus / breakers
- Special design aspects beyond typical industrial/commercial facilities:
  - Short circuit levels: bus and breaker selection
  - Bus configuration and connection to existing facility and AIES
  - Protection and protection coordination
  - Successful islanding

Feb 2017-Technical Seminar Copyright IEEE 2017

Generator Types Used in Cogeneration

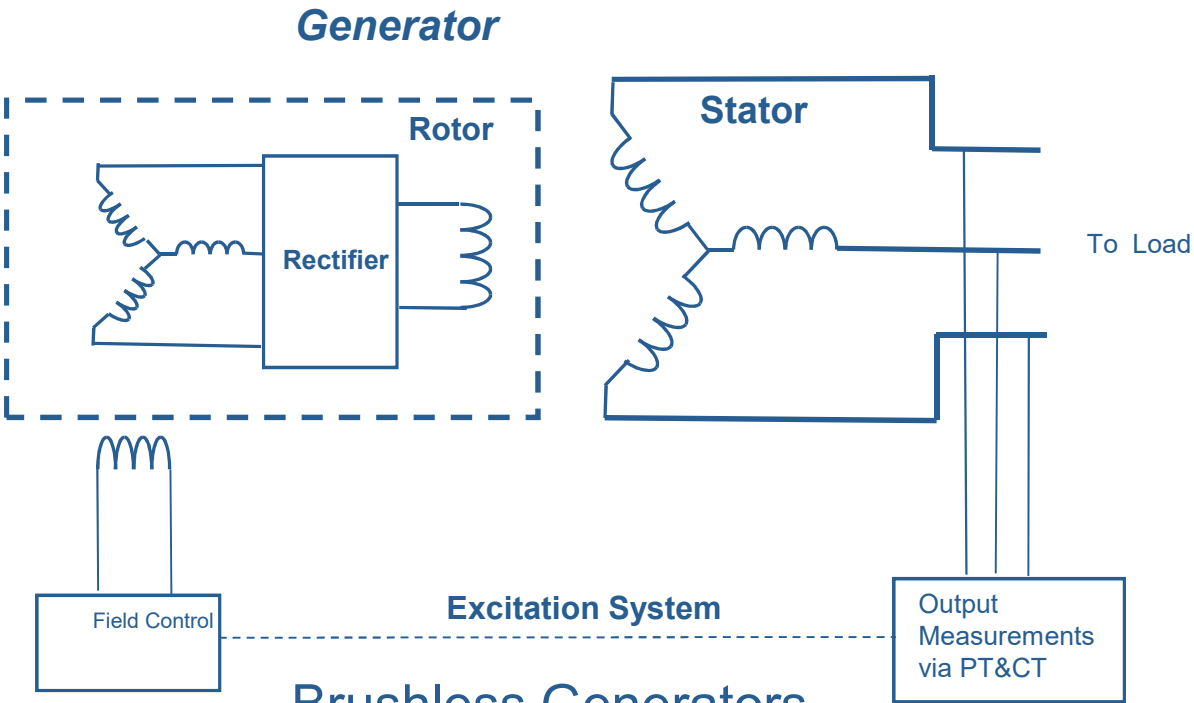

Brushless Generators
(Simplified Presentation)

Other Types are also used in cogeneration where size, economical considerations and/or jurisdictions requirements exist

Feb 2017-Technical Seminar Copyright IEEE 2017

Sizing Generators & Capability Curves

Generators key sizing aspects:

- Receive all turbine mechanical energy (shaft) & convert it to electrical energy (MW)
- Provide voltage support when connected to the outside World (MVARs from excitation system)
- Rating in MVA = $\sqrt{MW^2 + MVAR^2}$
- Cooling system to dissipate losses within generator

Feb 2017-Technical Seminar Copyright IEEE 2017

Key Electrical/Control Components of Generator/Turbine Block

- Generator
- Excitation System
- Auxiliaries (cooling, ventilation, noise control, termination etc)
- Protection, synchronization, and control of generator breaker
- Voltage control (Excitation control)
- Frequency control (Turbine governor control)
- Control and operation as part of the interconnected system

Feb 2017-Technical Seminar Copyright IEEE 2017

Key Components for Generator Control

- Synchronization & trip of Generator Breaker
- Voltage control (Excitation control)
- Frequency control (Turbine governor control)
- Operating ranges are represented by capability curves (See next two parts of the presentations

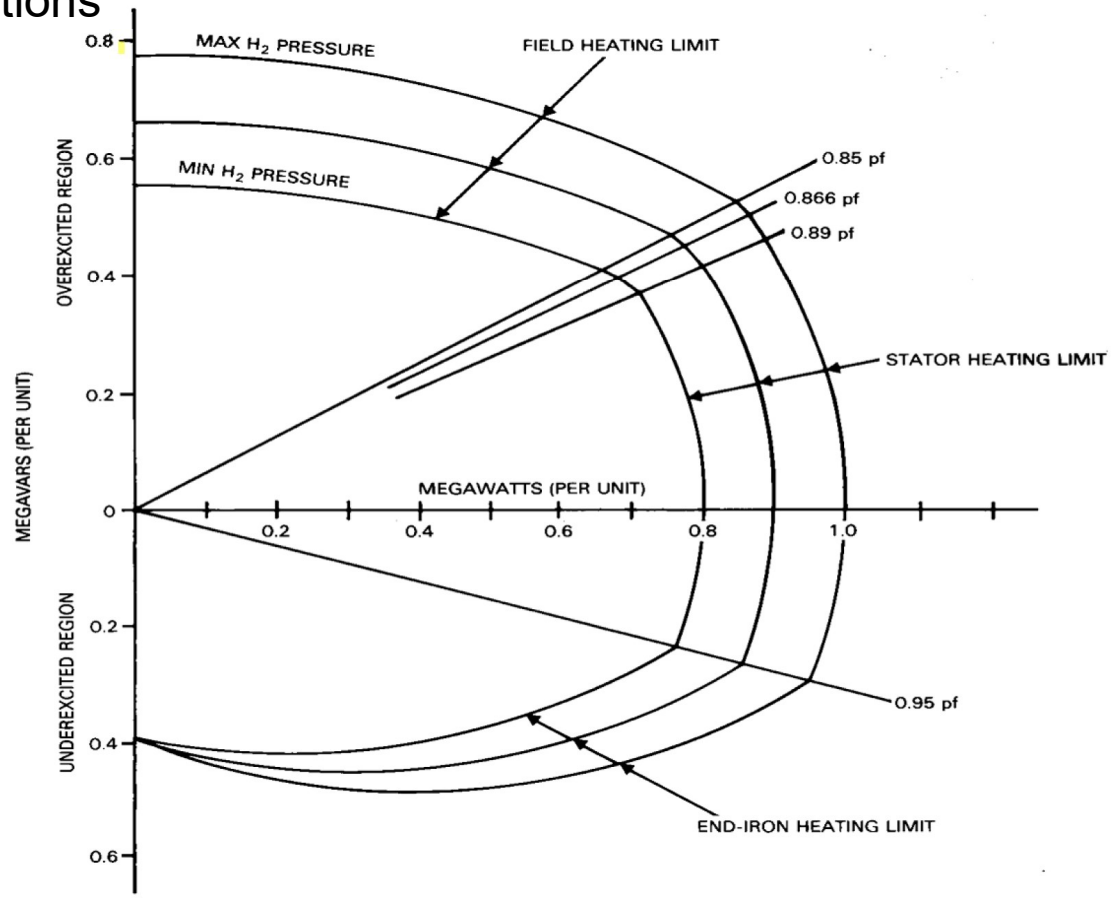

Feb 2017-Technical Seminar Copyright IEEE 2017

Generator Neutral Grounding

- In majority of Cogeneration configurations; neutrals were either solidly grounded (small generators), low resistance (medium- bus connected) or high resistance grounded (HRG)
- Recently, HRG is recommended wherever possible to reduce line-ground fault currents see IEEE Papers & standards

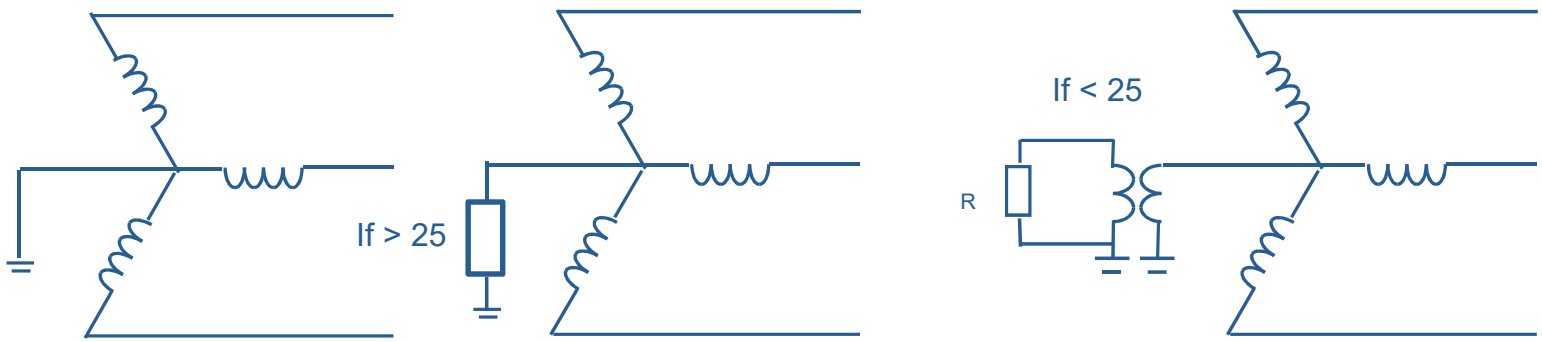

Solidly Neutral Grounded

Low Resistance Neutral Grounded

High Resistance Neutral Grounded

Feb 2017-Technical Seminar Copyright IEEE 2017

Generator Step up Transformer

- In many cogeneration applications, transformers connected to generator directly or through a generator breaker could be subjected to additional stresses.
- IEEE Standards C57.116-2014 “Guide for Transformers Directly Connected to Generators” address some practical concerns such as possible over fluxing and high short circuit levels
- Where cogeneration plant auxiliaries are set to have back feed from connecting utility during start up, transformers connection and phasing shall be checked for start up and normal operating conditions

Feb 2017-Technical Seminar Copyright IEEE 2017

Connection of Generator to Step up Transformer

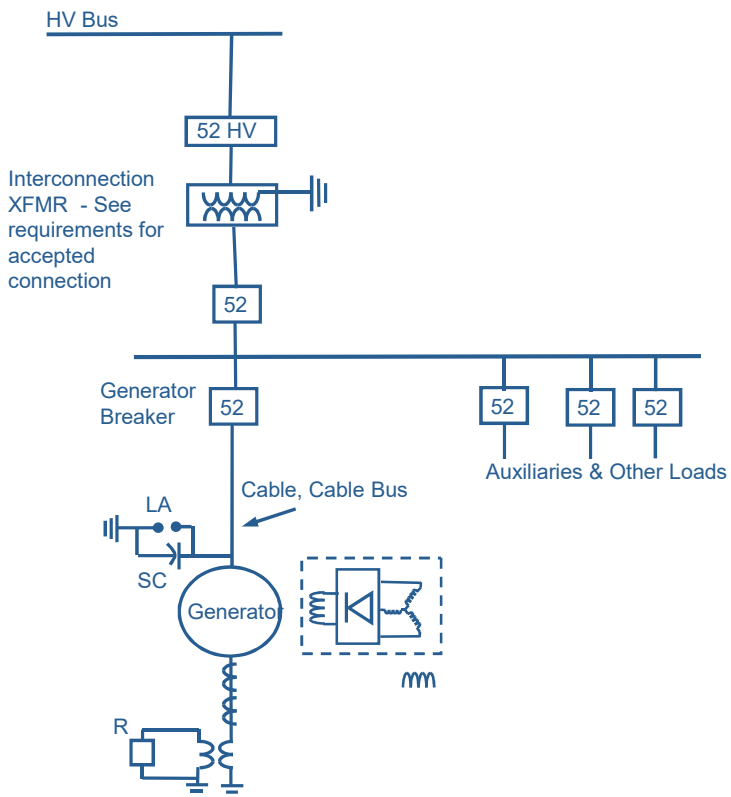

Typical Medium Size (cogeneration) arrangement

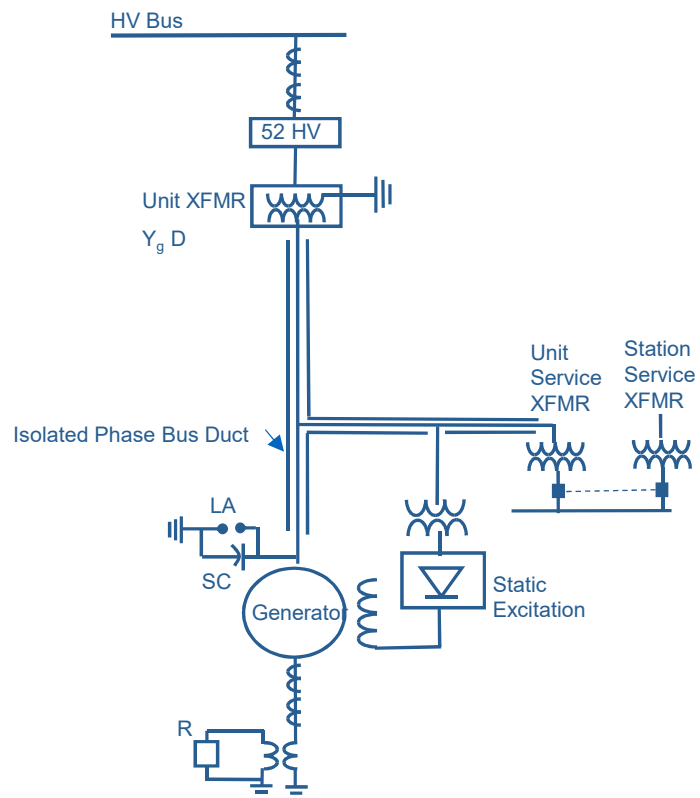

Typical very large generator (utility) arrangement

Please note that other connections are also available depending on site conditions and generator and turbine sizes and configurations

Feb 2017-Technical Seminar Copyright IEEE 2017

Short Circuit & Breaker Selection

- For small synchronous machines:
  - Sub-transient direct axis reactance X''_d
    - Ranges from .09 – .17 pu (9-17%), time: 0 to 6 cycles
    - Determines maximum instantaneous current and current at time if fast circuit breaker opens on a fault (i.e: molded case circuit breakers for small sets)
  - Transient direct axis reactance X'_d
    - Ranges from .13 – .20 pu (13-20%), time 6 cycles to 5 sec
    - Determines current at short time delay of circuit breakers
  - Synchronous reactance X_d
    - Ranges from 1.7 – 3.3 pu (170-330%) time: after 5 sec
    - Determines steady state current without excitation support (PMG)
    - Zero sequence reactance X_0 . Ranges from 0.06 – 0.09
    - Negative sequence reactance X_2 Ranges from 0.10 – 0.22 pu (10-22%) A factor in single-phase short circuit current
    - Generator breaker sizing is an important topic with a few critical items to verify, check references including IEEE/IEC 62271-C37-013-2015

Feb 2017-Technical Seminar Copyright IEEE 2017

Bus Selection and Design

- Bus rating for short circuit and load current
- Arc flash requirements
- Reliability and economics in bus configurations

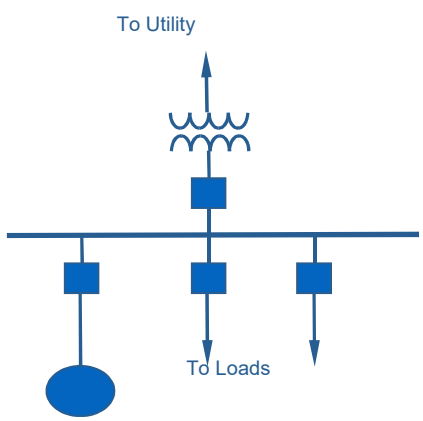

a) Single Bus- One Section

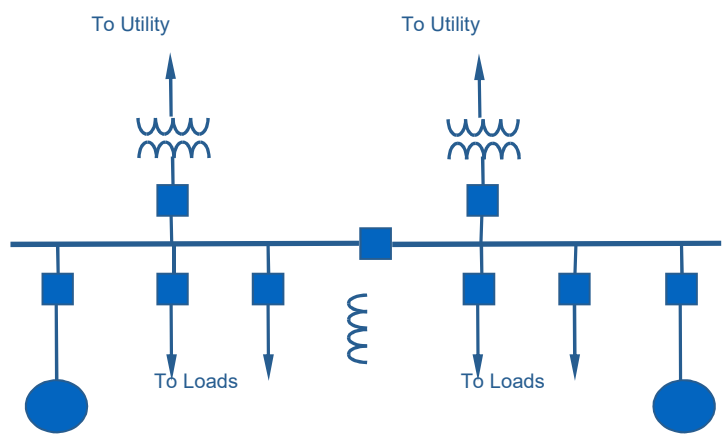

b) Single Bus- Two Section

Feb 2017-Technical Seminar Copyright IEEE 2017

Other Bus Configurations

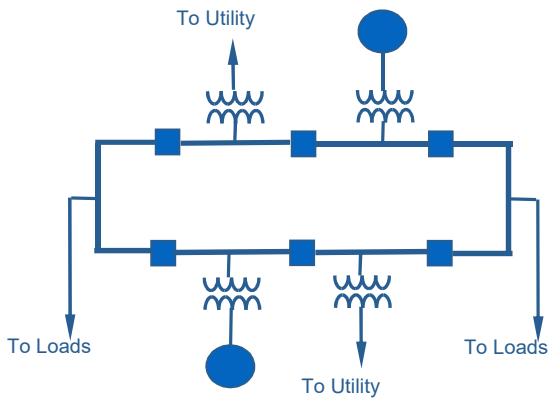

c) Ring Bus

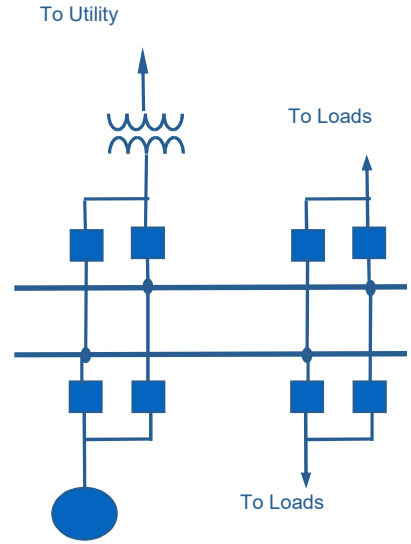

d) Double Bus- One Section

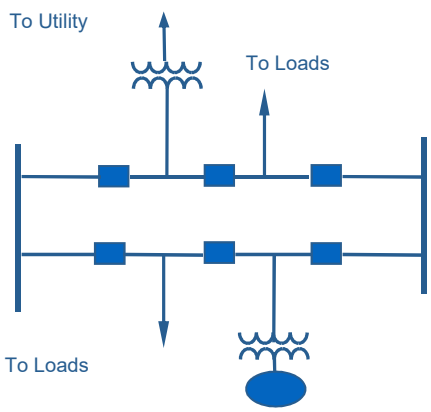

e) 1 $^1/_2$ Breaker Scheme

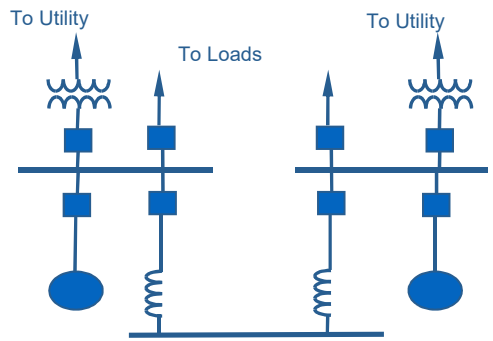

f) Main and Synchronizing Bus

Feb 2017-Technical Seminar Copyright IEEE 2017

Protection Notes

- Figure is not intended for detailed design (PT's SA, other protection functions are not shown)
- CT's for protection zones are shown to demonstrate the importance of coherence in protection design
- Some redundancy in protection is required to ensure reliability
- Care shall be given to overlap between zone, in order to quickly locate faults, isolate them and resume operation
- High resistance grounding: why it is very important and what are the recommended schemes?

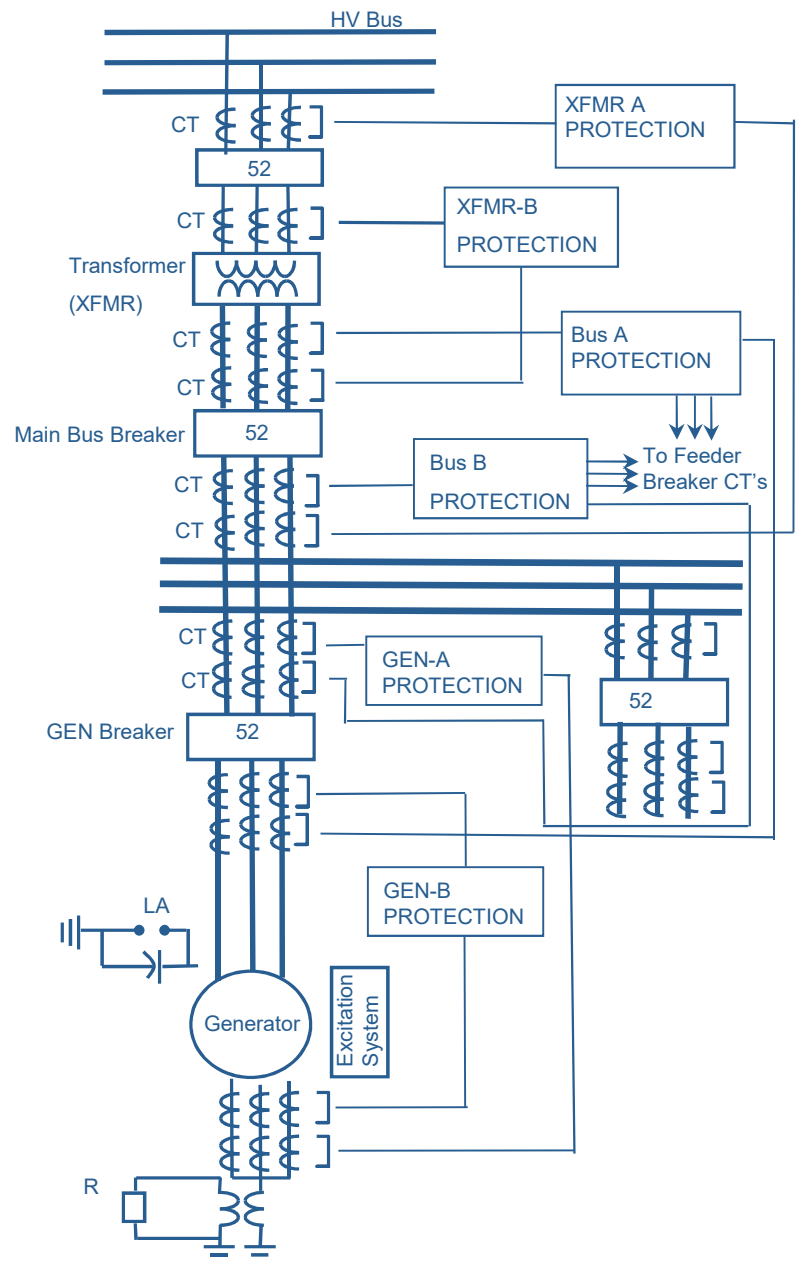

Feb 2017-Technical Seminar Copyright IEEE 2017

Protection Notes (Cont.)

- Bus protection and arc flash considerations
- Breaker fail protection: when and why?
- Reverse power protection: (acting when synchronizing with the grid)
- Over and under frequency
- Over voltage and Volt/Herts
- Transformer protection and including gas and other protection functions
- Back up protection
- Interconnection protection and distance protection applications

Feb 2017-Technical Seminar Copyright IEEE 2017

Islanding Considerations

- Islanding - plant powered solely by local generation and not connected to 3rd party
  - Intentional islanding (fault)
  - Un-intentional islanding (plant operator)
- Success requires 2 basic conditions
  - Stable system (voltage and/or frequency)
  - Balance of load and generation (MWs & MVARs)
- Design principles
  - Fault quickly isolated from all sources
    - Prevent equipment damage
    - System stability
  - Only those sources feeding fault should be isolated
  - Load shed may be required
    - Must be fast to prevent tripping generation/load
    - Process impacts must be carefully evaluated (hierarchy)
  - System must identify one slack generator to operate isochronouse
  - Design allows connection/synch back with 3rd party

Feb 2017-Technical Seminar Copyright IEEE 2017

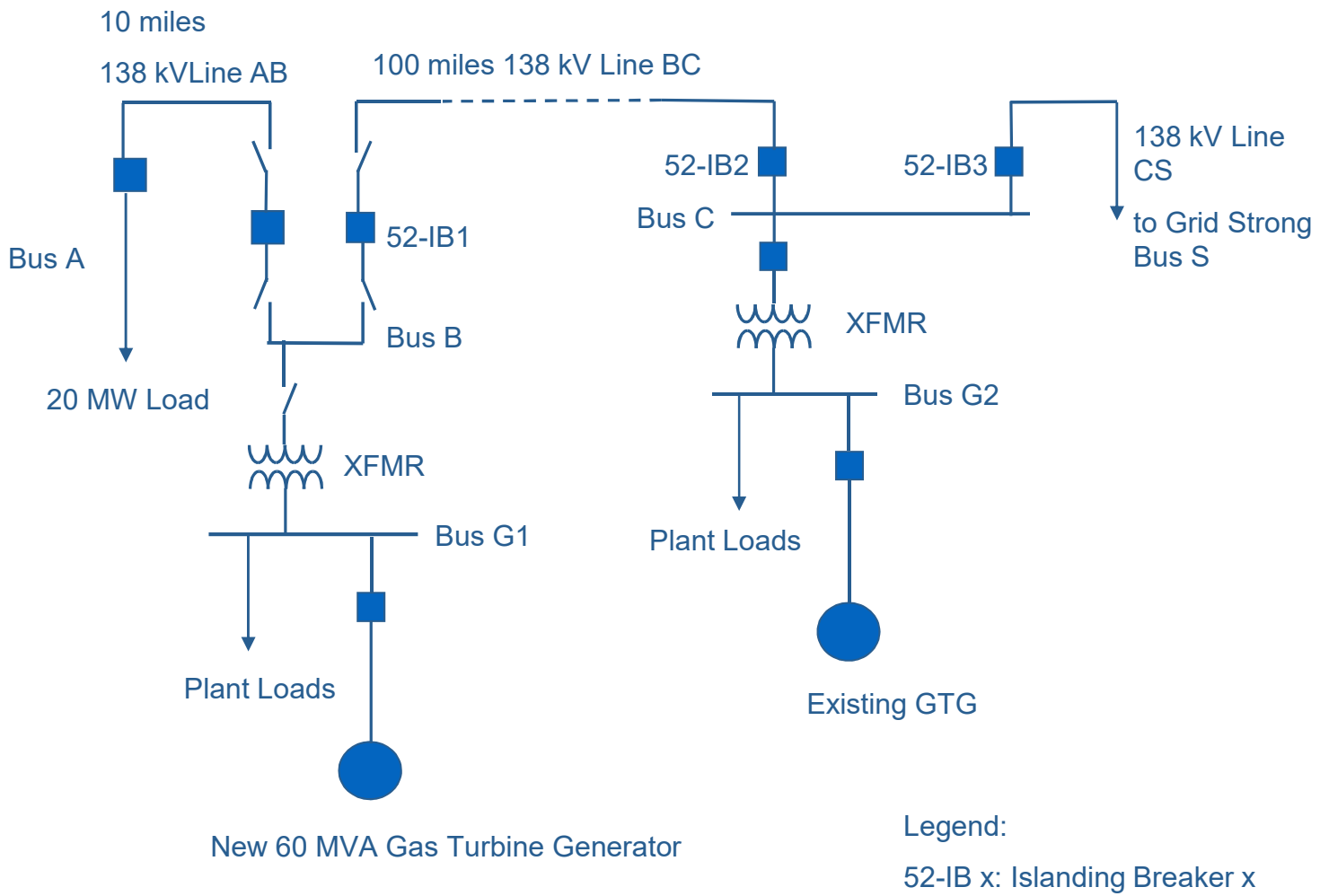

Connection of Generator at an end of a long line with Possible Islanding

Feb 2017-Technical Seminar Copyright IEEE 2017