Experience with existing cogeneration facilities

Feb 2017-Technical Seminar Copyright IEEE 2017

Topics

- Commissioning and Start-up
- Operation
- Islanding
- Maintenance Considerations

Feb 2017-Technical Seminar Copyright IEEE 2017

Commissioning and Start-Up
Typical Scope and Sequence

Electrical System
- Component tests
- Functional tests
- SCADA tests
- Energize GSU xfmr (backfeed)

Control System
- DCS loop checks
- Functional checks

Mechanical Equipment
- Engine commissioning
- HRSG & pipe chemical cleaning
- First fire of the turbine
- Steam blows of the steam piping

Systems
- Synchronization of the generators
- Power train on-line commissioning
- WECC tests
- Commercial operation

Feb 2017-Technical Seminar Copyright IEEE 2017

Commissioning and Start-Up
Common Start-Up Problems

Engines & turbines are usually well proven and start up ok.
Issues, if they exist, will likely be at interfaces.

Electrical systems require careful attention

- Excellent paper by Andrew R. Leoni and John P. Nelson on electrical commissioning errors (PCIC 2000):
  - *Some Lessons Learned from Commissioning Substation and Medium Voltage Switchgear Equipment*
- CT circuits (shorting screws, single-point grounding)
- Differential CT polarity
- Assuming factory wiring is correct
- Ground faults on DC circuits
- Problems often occur at interfaces

Feb 2017-Technical Seminar Copyright IEEE 2017

Commissioning and Start-Up
Common Start-Up Problems … continued

Allow extra time for heat recovery equipment, steam/water systems.

- Not as “packaged” as other mechanical equipment
- Lots of interfaces – again, problems seem to occur at interfaces

Feb 2017-Technical Seminar Copyright IEEE 2017

Commissioning and Start-Up
Proving Synchronism

- Proof of synchronism is a critical commissioning activity.
- Failure to conclusively prove synchronism can have nasty consequences.

Small Gensets:

Direct voltage measurement across two phases is usually practical.

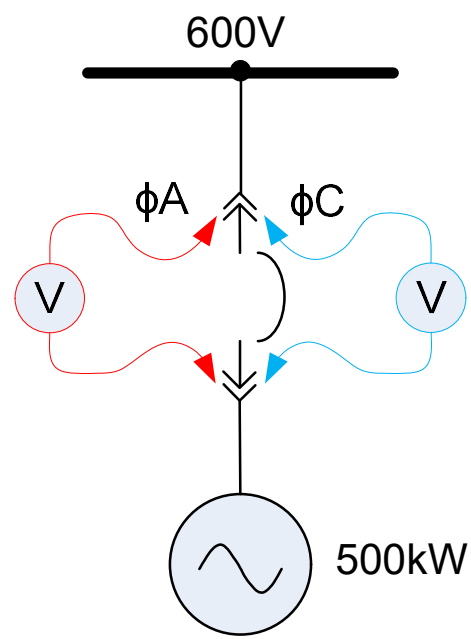

Use 2 voltmeters to detect this condition:

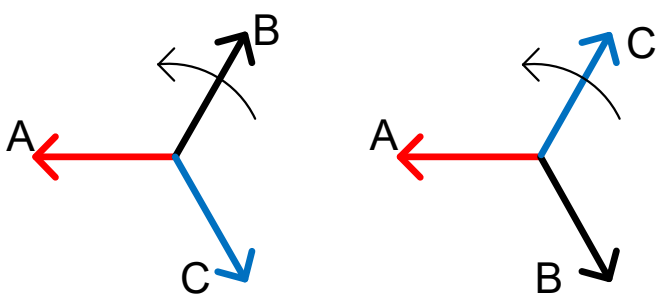

Grid Phasors Gen Phasors

Feb 2017-Technical Seminar Copyright IEEE 2017

Commissioning and Start-Up
Proving Synchronism

Direct phase measurement is the ideal and foolproof way to prove synchronism. But it is not always practical.

- Physical restrictions can prevent access to primary conductors.
- Hazards due to high fault levels.
- Availability of adequately rated test equipment.

In such cases, consider using secondary circuits and phasor relationships. But be diligent.

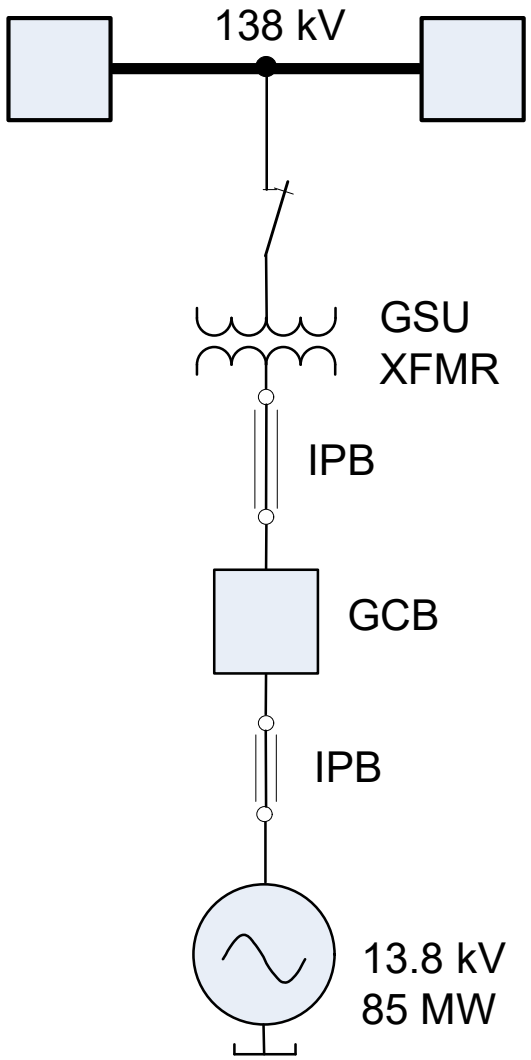

Feb 2017-Technical Seminar Copyright IEEE 2017

Commissioning and Start-Up
Proving Synchronism

Proving synchronism with secondary circuits is elegant, but needs to be as close to foolproof as possible.

- Understand that two "secondary" wrongs can give false indication of a "primary" right.
- Forget the notion that double contingency failures or errors do not occur. They do.
- Use different test methods and overlapping proofs to validate system.

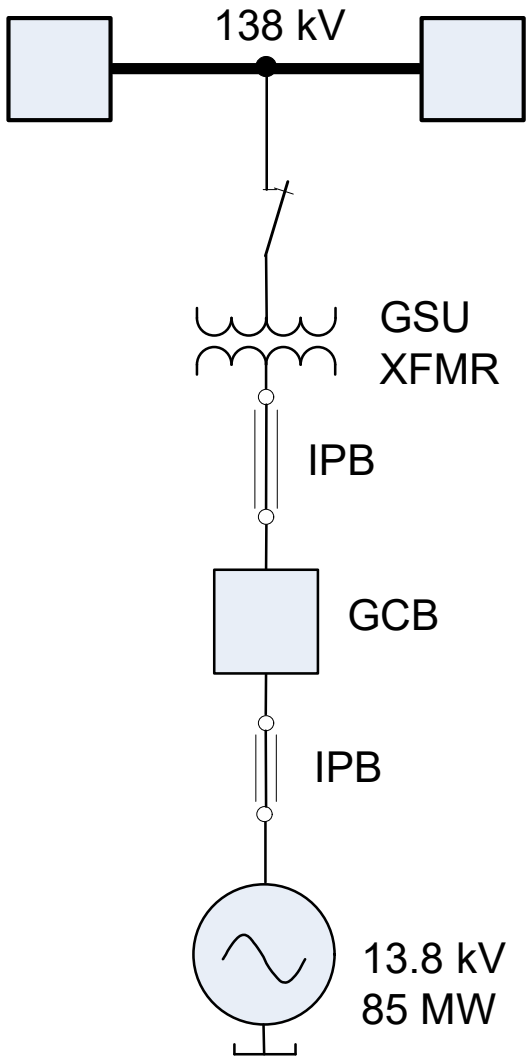

Feb 2017-Technical Seminar Copyright IEEE 2017

Commissioning and Start-Up
Proving Synchronism with Secondary Circuits

- Multifunction relay with running and incoming phasor display.
- Wye PTs on each side of GCB.
- Airgap at generator terminals. Coordinate this with construction to avoid disconnection.
- Isolation above sync circuits.
- Temporary power source (3ph) connected to main conductors.
- Continuity through GCB.

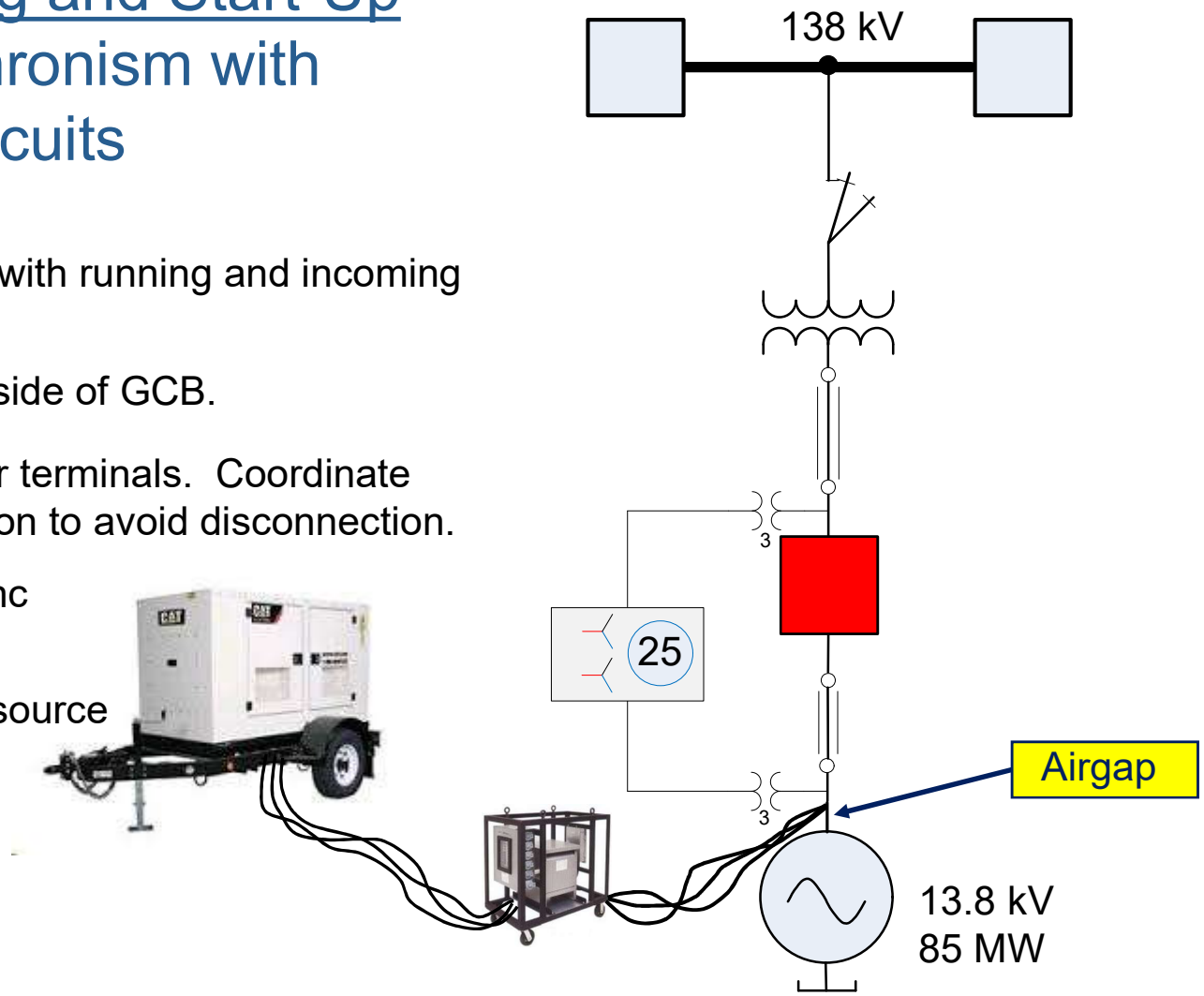

Feb 2017-Technical Seminar Copyright IEEE 2017

Commissioning and Start-Up
Proving Synchronism with Secondary Circuits

1. Record the two synchronizing phasors with three phase test voltage applied.

COMPONENT	MAGNITUDE / ANGLE	COLOR	ASSIGN TO	GRAPH	MAP PHAS
GEN (SRC 1)-Phasor Ia	0.000 A 0.0 deg		Phasor Set 1	1	Select Phasc
GEN (SRC 1)-Phasor Ib	0.000 A 0.0 deg		Phasor Set 1	2	Select Phasc
GEN (SRC 1)-Phasor Ic	0.000 A 0.0 deg		Phasor Set 1	3	Select Phasc
GEN (SRC 1)-Phasor Vag	311.942 V 0.0 deg		Phasor Set 2		
GEN (SRC 1)-Phasor Vbg	311.739 V -120.8 deg		Phasor Set 2		
GEN (SRC 1)-Phasor Vcg	312.422 V -240.3 deg		Phasor Set 2		
GENBUS (SRC 2)-Phasor Vag	311.224 V -0.2 deg		Phasor Set 3		
GENBUS (SRC 2)-Phasor Vbg	310.028 V -120.8 deg		Phasor Set 3		
GENBUS (SRC 2)-Phasor Vcg	312.054 V -240.3 deg		Phasor Set 3		
None					
None					
None					

Gen Side

Grid Side

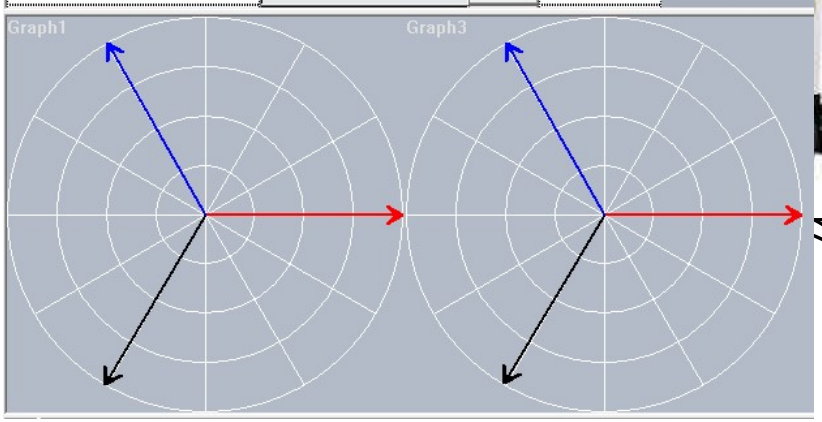

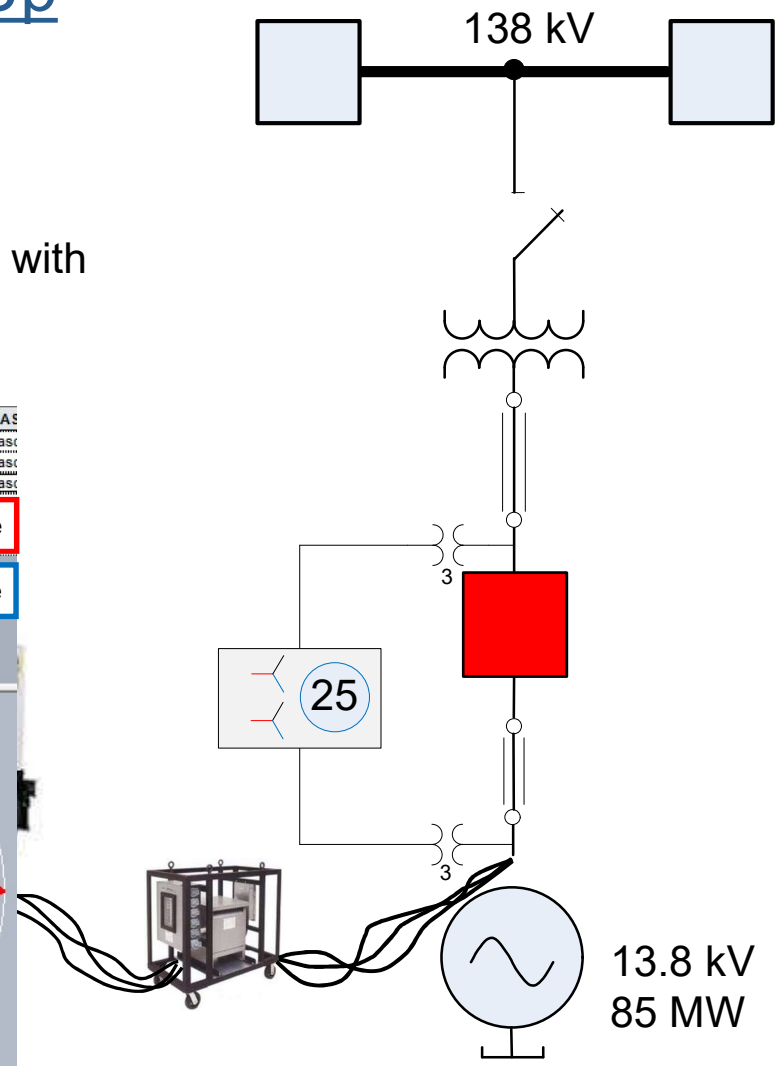

Feb 2017-Technical Seminar Copyright IEEE 2017

Commissioning and Start-Up
Proving Synchronism with Secondary Circuits

2. Open the generator breaker. Verify that phasors on one side collapse. Prove that sensing really is on opposite sides of the breaker.

COMPONENT	MAGNITUDE / ANGLE	COLOR	ASSIGN TO	GRAPH	MAP PHASC
GEN (SRC 1)-Phasor Ia	0.000 A 0.0 deg		Phasor Set 1	1	Select Phasor
GEN (SRC 1)-Phasor Ib	0.000 A 0.0 deg		Phasor Set 1	2	Select Phasor
GEN (SRC 1)-Phasor Ic	0.000 A 0.0 deg		Phasor Set 1	3	Select Phasor
GEN (SRC 1)-Phasor Vag	313.458 V 0.0 deg		Phasor Set 2		
GEN (SRC 1)-Phasor Vbg	311.336 V -120.7 deg		Phasor Set 2		
GEN (SRC 1)-Phasor Vcg	313.902 V -240.6 deg		Phasor Set 2		
GENBUS (SRC 2)-Phasor Vag	0.000 V 0.0 deg		Phasor Set 3		
GENBUS (SRC 2)-Phasor Vbg	0.000 V 0.0 deg		Phasor Set 3		
GENBUS (SRC 2)-Phasor Vcg	0.000 V 0.0 deg		Phasor Set 3		
None					
None					
None					

Gen Side

Grid Side

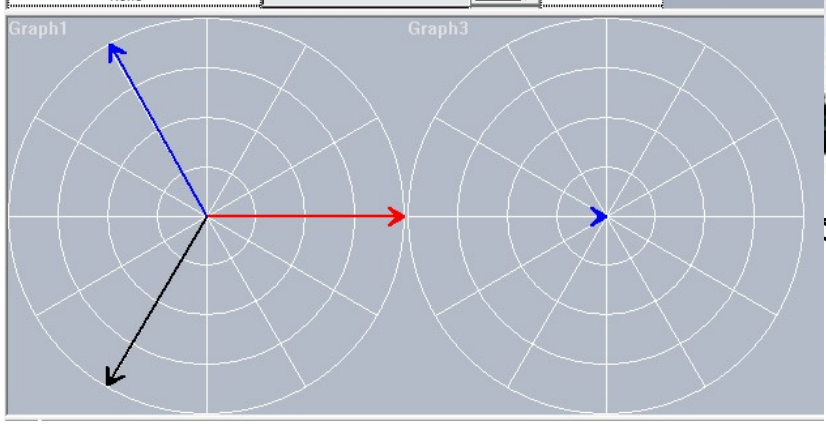

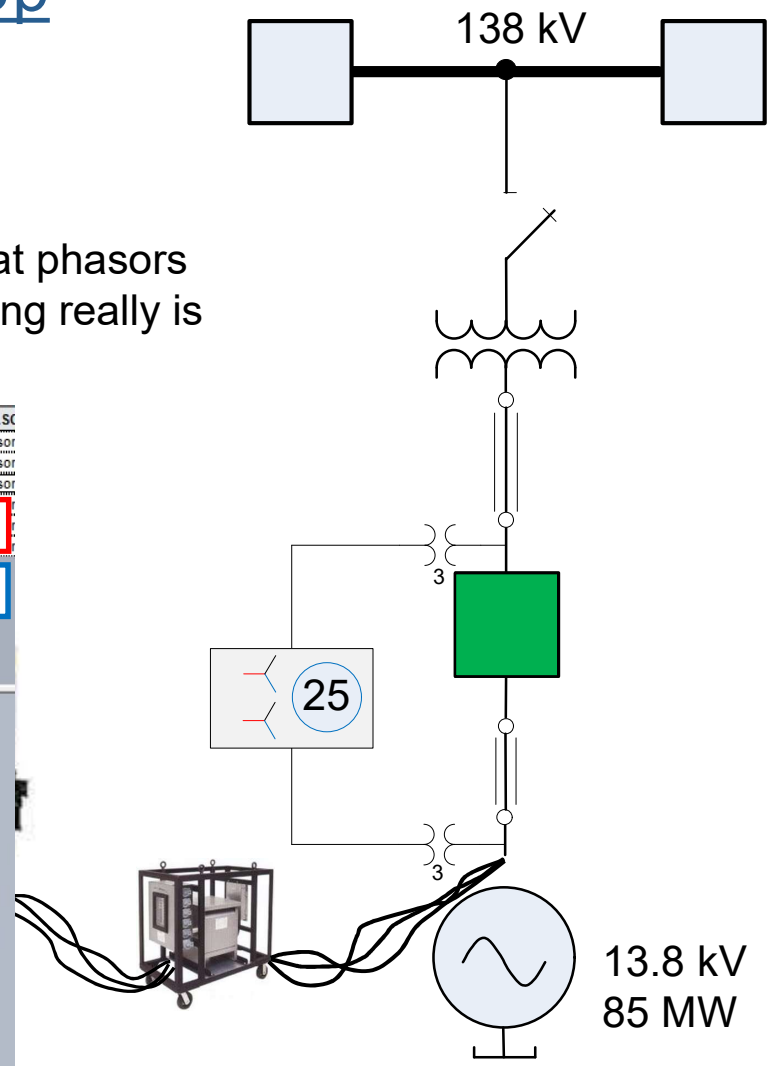

Feb 2017-Technical Seminar Copyright IEEE 2017

Commissioning and Start-Up
Proving Synchronism with Secondary Circuits

3. Close breaker and energize only one phase.

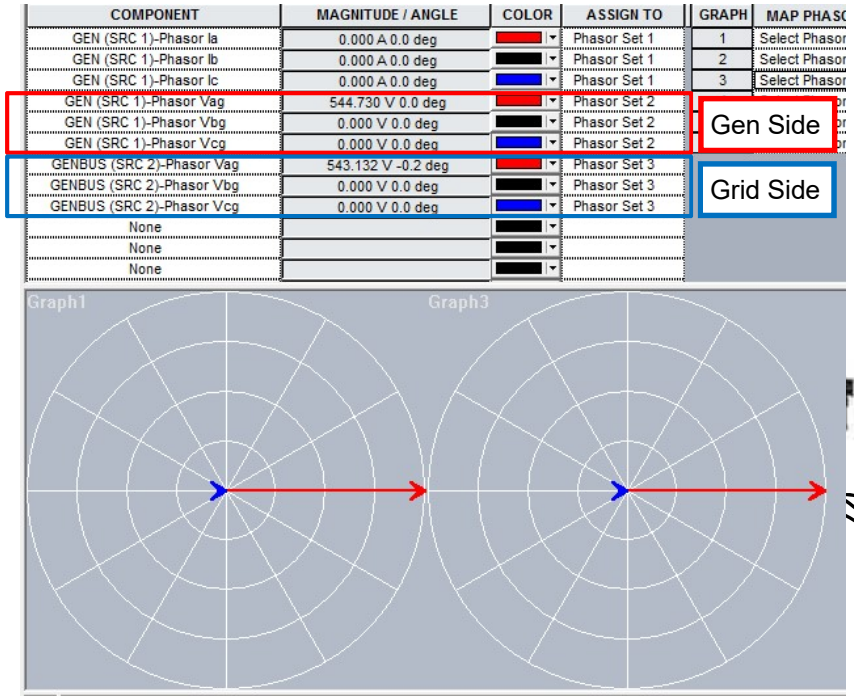

COMPONENT	MAGNITUDE / ANGLE	COLOR	ASSIGN TO	GRAPH	MAP PHASO
GEN (SRC 1)-Phasor Ia	0.000 A 0.0 deg		Phasor Set 1	1	Select Phasor
GEN (SRC 1)-Phasor Ib	0.000 A 0.0 deg		Phasor Set 1	2	Select Phasor
GEN (SRC 1)-Phasor Ic	0.000 A 0.0 deg		Phasor Set 1	3	Select Phasor
GEN (SRC 1)-Phasor Vag	544.730 V 0.0 deg		Phasor Set 2		
GEN (SRC 1)-Phasor Vbg	0.000 V 0.0 deg		Phasor Set 2		
GEN (SRC 1)-Phasor Vcg	0.000 V 0.0 deg		Phasor Set 2		
GENBUS (SRC 2)-Phasor Vag	543.132 V -0.2 deg		Phasor Set 3		
GENBUS (SRC 2)-Phasor Vbg	0.000 V 0.0 deg		Phasor Set 3		
GENBUS (SRC 2)-Phasor Vcg	0.000 V 0.0 deg		Phasor Set 3		
None					
None					
None					

Gen Side

Grid Side

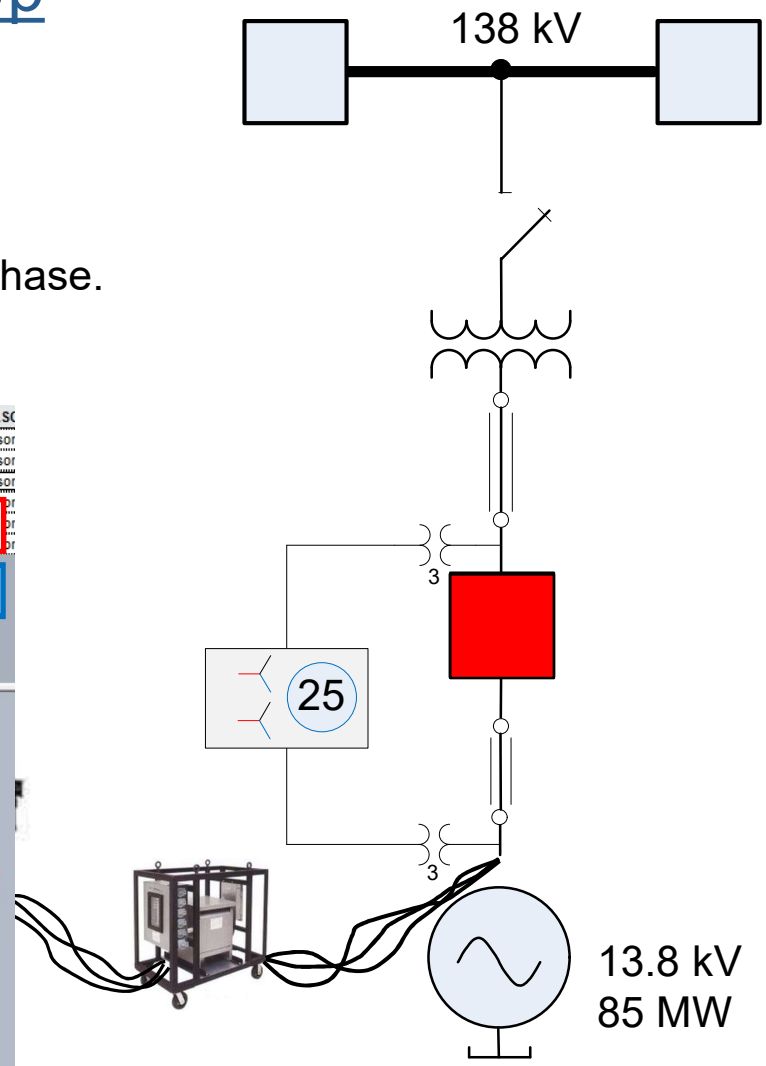

Feb 2017-Technical Seminar Copyright IEEE 2017

Commissioning and Start-Up
Proving Synchronism with Secondary Circuits

4. Remove test equipment.

   Leave generator terminal air gap in place.

   Prepare for back-energization.

   Back-energize.

   Record phasors on each side of GCB. Safely store this information for future reference.

   Pay particular attention to phase rotation.

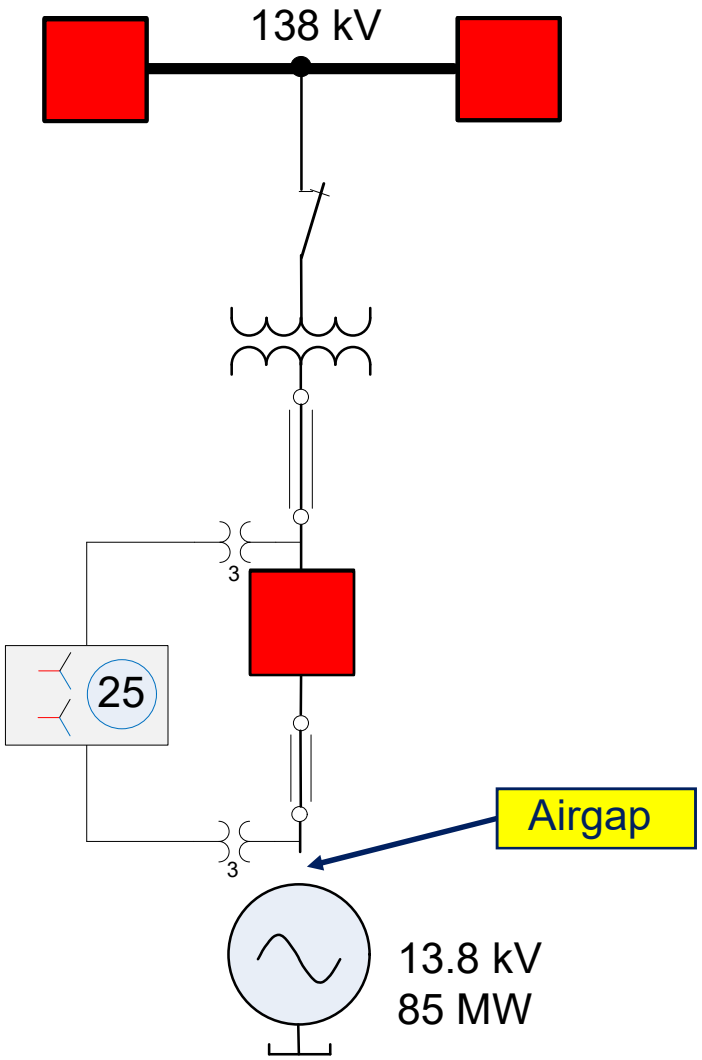

Feb 2017-Technical Seminar Copyright IEEE 2017

Commissioning and Start-Up
Proving Synchronism with Secondary Circuits

5. Close generator terminal air gap. Bolt up busbars, flexible braids. (Hint: ensure all material is available beforehand.)

   Open switch or breaker on HV side of GSU xfmr.

   Commission excitation system. Excite generator (and GSU xfmr).

   Record phasors on each side of GCB.

   Verify phase rotation is same as that recorded during backfeed.

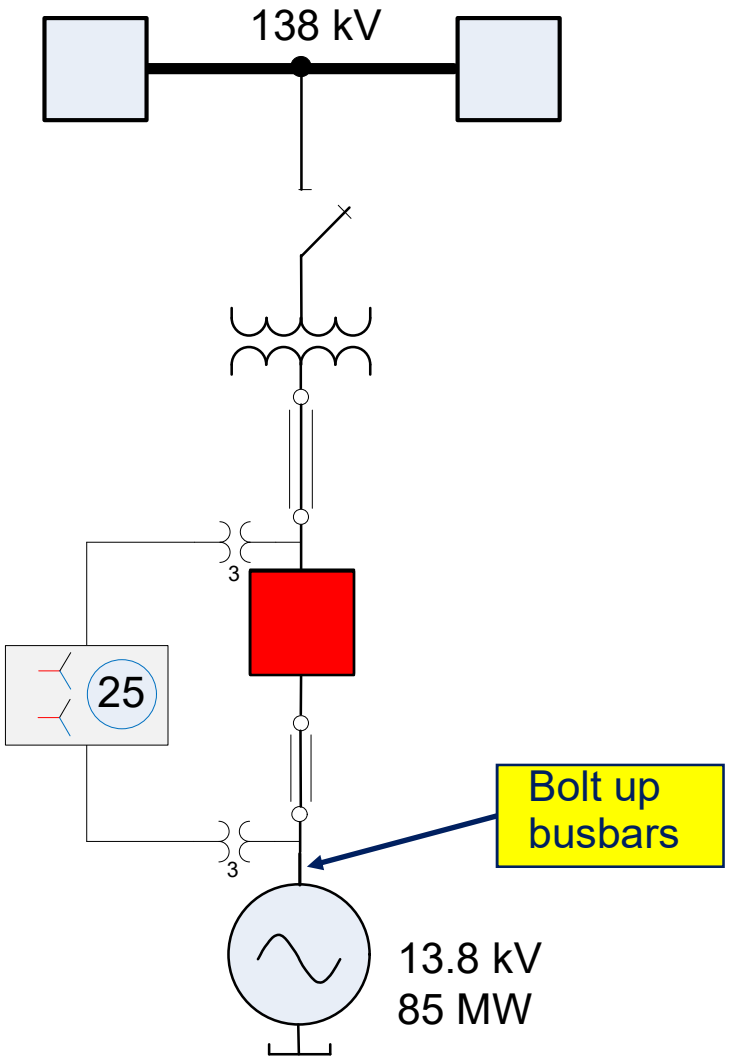

Feb 2017-Technical Seminar Copyright IEEE 2017

Operations Capability Curve

Typical Generator Data:
87.55MW, 103.00 MVA
0.85 lag to 0.95 lead
40°C Cooling Air

At Unity pf:
103.0 MW
0.0 MVAr

At 0.85 Lagging pf:
87.6 MW
54.3 MVAr

At 0.95 Leading pf:
97.8 MW
32.2 MVAr

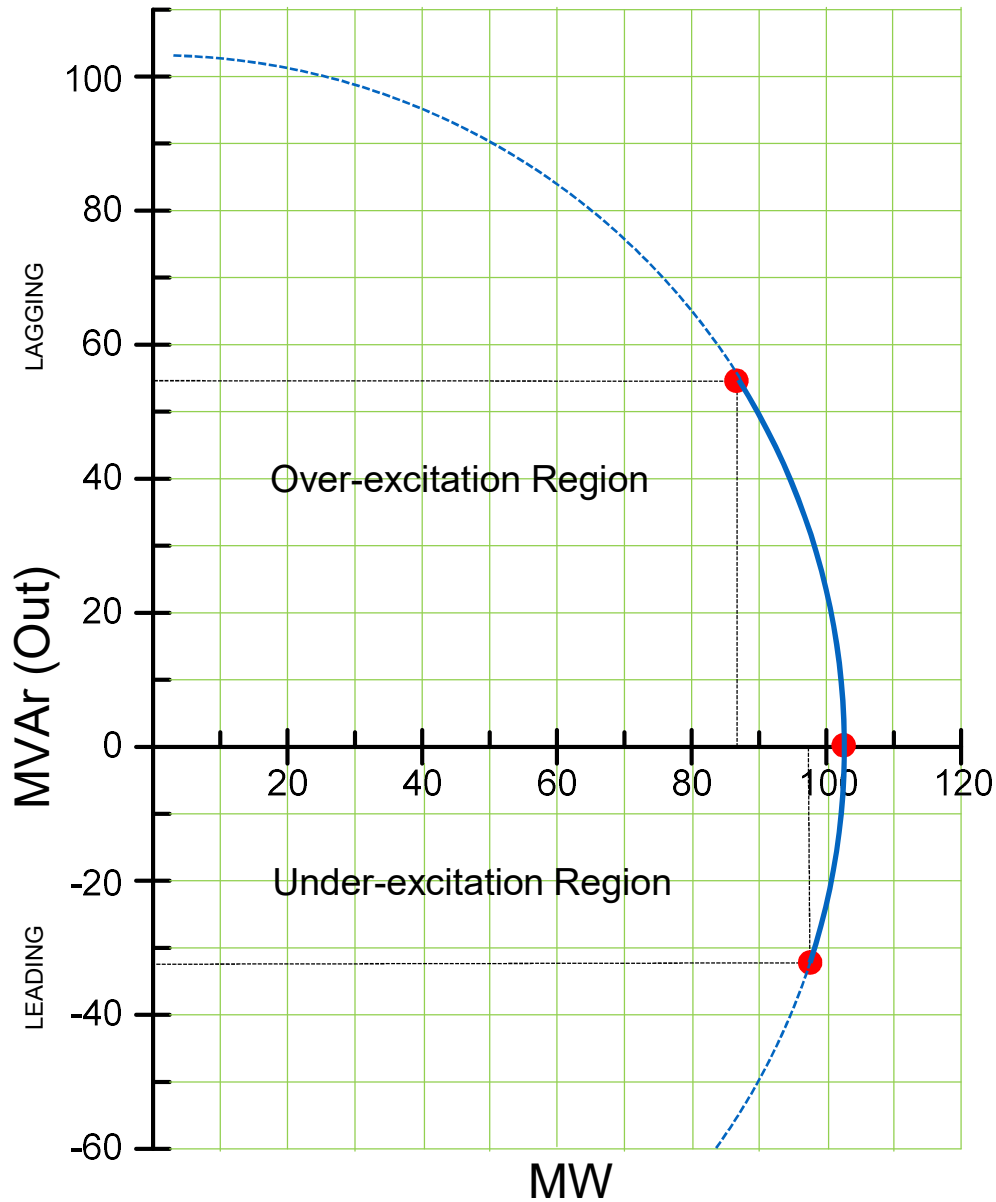

Feb 2017-Technical Seminar Copyright IEEE 2017

Operations
Capability Curve

Current in over-excitation region is limited by rated field current

Current in under-excitation region is limited by core end heating

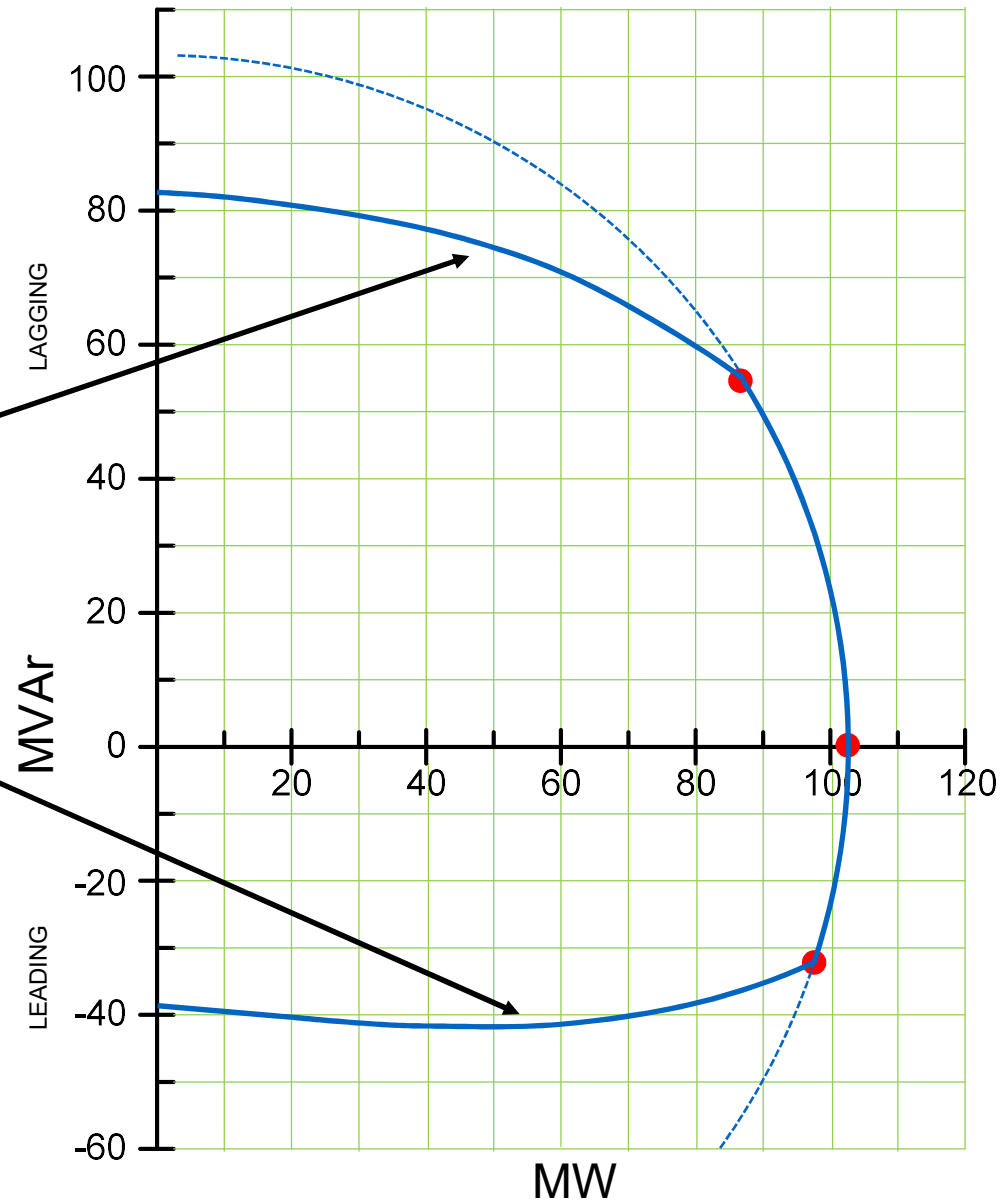

Feb 2017-Technical Seminar Copyright IEEE 2017

Operations
Capability Curve

Export reactive power (lagging / over excitation) is limited by rated field current

Import reactive power (leading / under excitation) is limited by core end heating

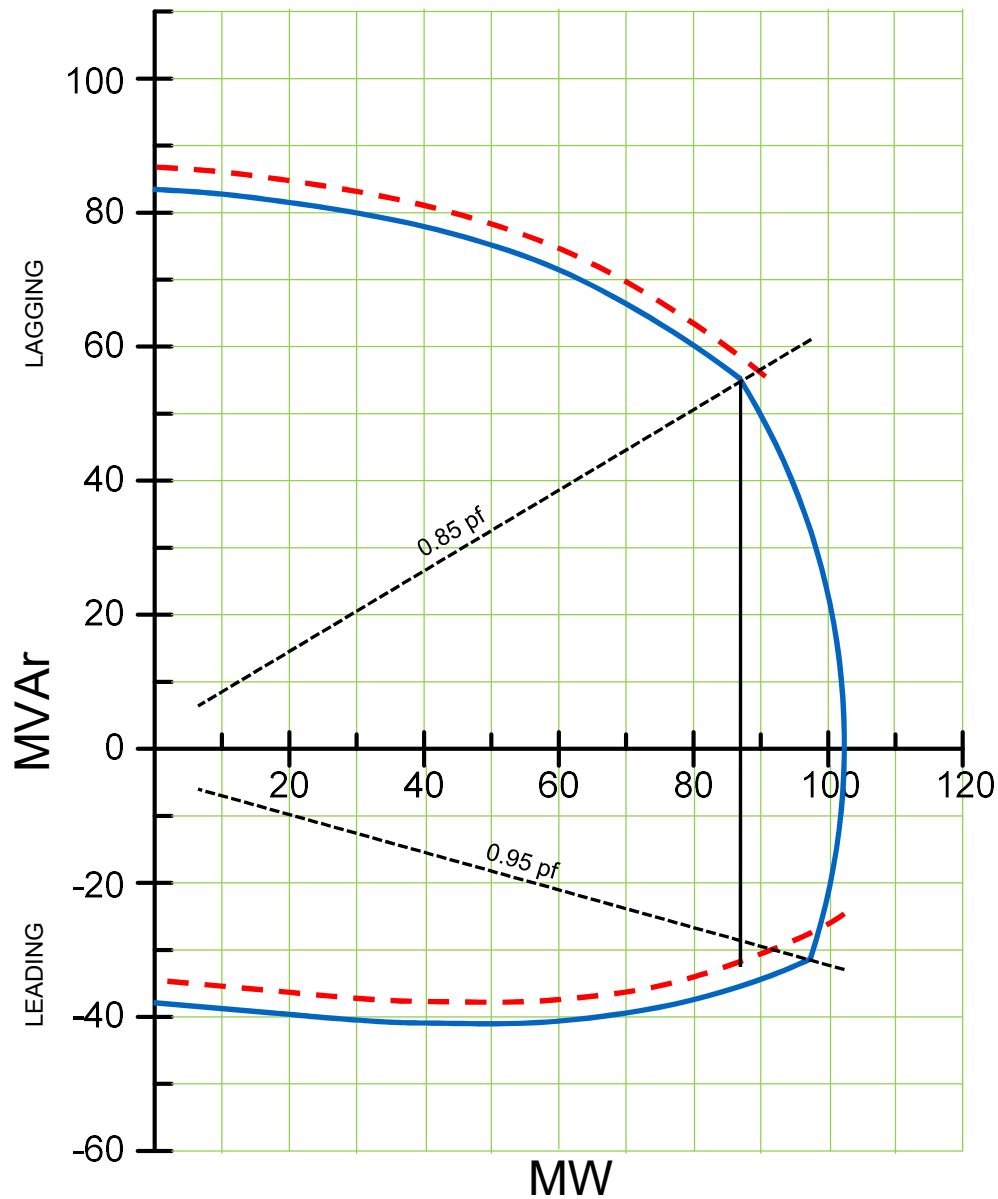

Feb 2017-Technical Seminar Copyright IEEE 2017

Operations
Capability Curve

Export reactive power (lagging / over excitation) is limited by rated field current

Import reactive power (leading / under excitation) is limited by core end heating

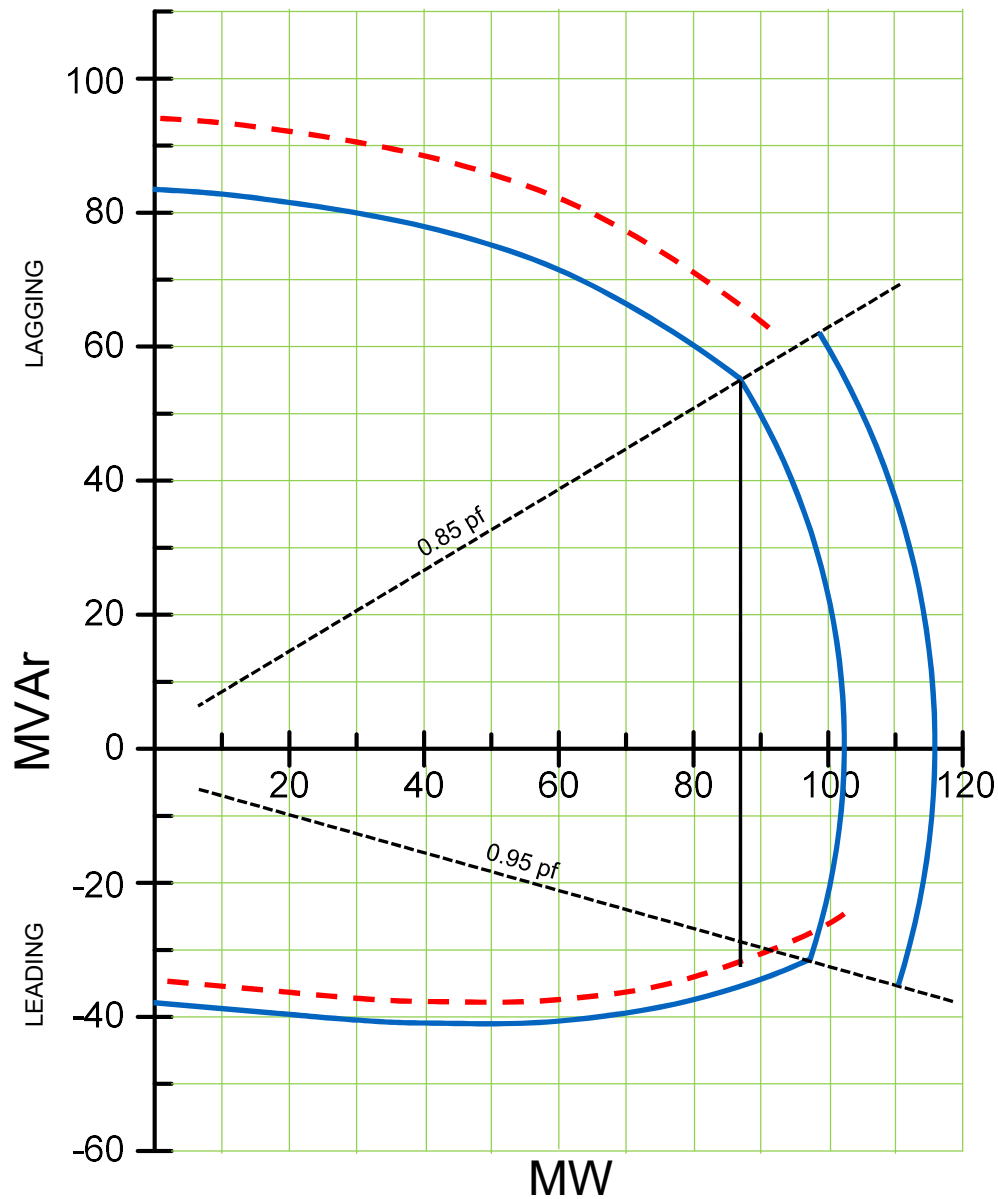

Feb 2017-Technical Seminar Copyright IEEE 2017

Operations
Generator Voltage Control

Show a few examples:

1. Unity power factor at generator
2. Unity power factor at grid intertie
3. Unity power factor at generator tie-point.

Message: Need to decide optimal operating mode. Ensure panel operators know operating objectives.

Feb 2017-Technical Seminar Copyright IEEE 2017

Commissioning and Start-Up
Proving Synchronism

Proof of synchronism is a critical commissioning activity.

Failure to conclusively prove synchronism can have nasty consequences.

Small Gensets:

- Direct voltage measurement across two phases is usually practical.

Large generators:

- Voltage magnitude, physical restrictions, extreme arc flash levels can make direct voltage measurements impractical.
- Probably need to consider less direct methods to prove synchronism.

Feb 2017-Technical Seminar Copyright IEEE 2017

Islanding

Typically most beneficial for co-generation facilities: Keep the process running (or minimize interruption). Less so for simple cycle or combined cycle facilities.

Implementation is often non-trivial. Cost versus benefit should be considered during DBM stage. Purchase the equipment and design the facility accordingly.

Islanding considerations:

- Import versus export @ PoC
- Detection of island condition
- Turbine transient response
- Flame robustness
- Exciter response
- Signal exchange with turbine
- Transition to isochronous oper.
- Interoperation of multiple units
- Turbine load ramp rate
- Ability to re-synchronize

Feb 2017-Technical Seminar Copyright IEEE 2017

Summary & conclusions
Questions & discussion

Feb 2017-Technical Seminar Copyright IEEE 2017