Micropower Low-Voltage Digital Class D Amplifier for Hearing Aid Applications

by

Bah-Hwee Gwee
Associate Professor, Nanyang Technological University
Senior Consultant, Digital Hearing Aid Centre
Co-Founder & Director, Advanced Electroacoustics Pte Ltd

Outline

- Hearing Impairment
- Hearing Aids
- Linear Amplifiers
- Class D Amplifier
- Conclusion

NANYANG TECHNOLOGICAL UNIVERSITY

Outline

- Hearing Impairment
  - Causes
  - Types
  - Levels
  - Facts
- Hearing Aids
- Linear Amplifiers
- Class D Amplifier
- Conclusion

NANYANG TECHNOLOGICAL UNIVERSITY

Hearing Impairment

The International Symbol for Deafness

- **Complete (deafness) or partial loss of the ability to hear from one or both ears**
- **Causes:**
  - **Blockage: earwax, foreign bodies**
  - **Inherited**
  - **Pregnancy & birth disorders: premature birth, lack of oxygen, syphilis infections, jaundice**
  - **Diseases & illnesses: ear infections (mumps, measles), meningitis, brain tumour, stroke**
  - **Ototoxic drugs: antibiotic, anti-malaria drugs**
  - **Excessive noise: explosion, loud music/noises**
  - **Injuries: head injury, ear injury**
  - **Age-related (presbycusis): starting from 30 years old**

References: World Health Organization, NHS Direct UK

Types of Hearing Impairment

- **Conductive**
  - Outer or middle ear
  - Usually medically or surgically treatable,

    e.g. middle ear infections
- **Sensorineural**
  - Inner ear or hearing nerve
  - Usually permanent
  - Requires a hearing aid

    e.g. excessive noise, ageing
- **Mixed**

Diagram of the ear

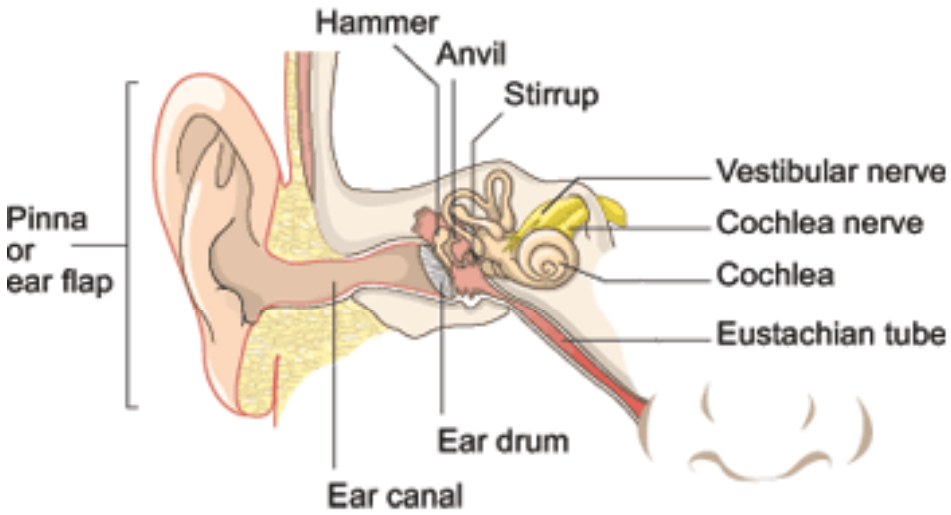

References: World Health Organization, NHS Direct UK

Levels of Hearing Impairment

- **Mild** : unable to hear 25 - 39 dB
- **Moderate** : 40 - 69 dB
  - Need hearing aid
- **Severe** : 70 - 94 dB
  - Need lip-reading or sign language and hearing aid
- **Profound** : ≤95 dB
  - Need lip-reading or sign language
  - Hearing nerves still work ⟹ use cochlear implant

Decibel Scale of Common Sounds	
Threshold of Hearing	0 dB
Breathing	10 dB
Whisper, rustling leaves	20 dB
Library	40 dB
Vacuum cleaner	70 dB
Food blender, busy street	90 dB (hearing damage after 8 hrs)
Jet takeoff (305 m), jackhammer	100 dB (serious hearing damage after 8 hrs)
Thunderclap, live rock music	120 dB (human pain threshold)

NANYANG TECHNOLOGICAL UNIVERSITY

References: NHS Direct UK, Dangerous Decibels

Test Your Hearing Yourself!

- Do you have trouble understanding higher pitched voices such as women's and children's?
- Do you have trouble hearing conversations in a noisy background?
- Do you often ask people to repeat themselves?
- Do you hear the people that you talk to have loud enough but mumbled voices?
- Do you turn up the volume of the TV when others have no problem hearing?
- Do you have trouble localizing sounds (unilateral hearing impairment)?

Reference: Better Hearing Institute

Facts

- 278 million people worldwide have moderate to profound hearing loss (2005)
- Number rising due to a growing global population and longer life expectancies
- One quarter of cases begin during childhood
- Detecting and responding to hearing impairment in babies and young children is vital for the development of speech and language
- Properly fitted hearing aids can improve communication in at least 90% of people with hearing impairment (the other 10% may be helped medically)
- Current annual production of hearing aids meets less than 10% of global need
- Cost of hearing aids: US$1K – US$6K (expensive research, audiologist/fitter wages, custom-made, quality improvements: size, style, features)
- Increased the availability of affordable, properly fitted hearing aids and follow-up services can benefit many people with hearing impairment

Reference: World Health Organization, Better Hearing Institute

Outline

- Hearing Impairment
- Hearing Aids
  - Styles
  - Batteries
  - Block Diagram
  - Typical Specifications
- Linear Amplifiers
- Class D Amplifier
- Conclusion

NANYANG TECHNOLOGICAL UNIVERSITY

Hearing Aids

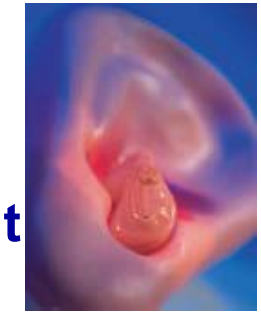

- **Primarily useful for *Sensori-Neural* hearing impairment (disease, ageing, injury)**
- **Magnifies sound vibrations entering the ear**
- **Surviving hearing nerves detect the larger vibrations and convert them into neural signals**
- **More nerve damage ⇨ more severe hearing loss ⇨ more amplification needed**

⇩

Practical limits

NANYANG TECHNOLOGICAL UNIVERSITY

Styles of Hearing Aids

- **Completely-in-Canal (CIC)**
  - Mild to severe
  - Small, limited power and volume

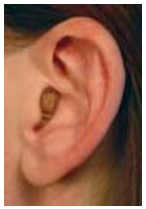

- **In-the-Canal (ITC)**

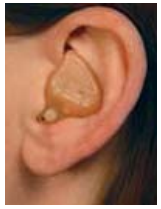

- **In-the-Ear (ITE)**
  - Mild to severe
  - Not worn by children (as ear grows)

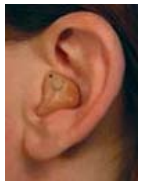

- **Behind-the-Ear (BTE)**
  - All ages
  - Mild to profound

- **Open Fit BTE**
  - Behind the ear completely
  - Narrow receiver tube in ear canal
  - Eliminate occlusion effect

NANYANG TECHNOLOGICAL UNIVERSITY

References: Siemens Hearing Instruments, National Institute on Deafness and Other Communication Disorders

Types of Hearing Aids

- **Analog**
  - Convert input sound waves into electrical signals and amplify them
  - Less expensive

- **Digital**
  - Convert input sound waves into numerical codes before amplifying them
  - Programmable for each individual wearer
  - Digital sound processing:
    - background noise reduction
    - acoustic feedback cancellation
    - speech enhancement
    - automatic gain
    - directional sound focus
  - Smaller, lighter

NANYANG TECHNOLOGICAL UNIVERSITY

Components of a Digital Hearing Aid

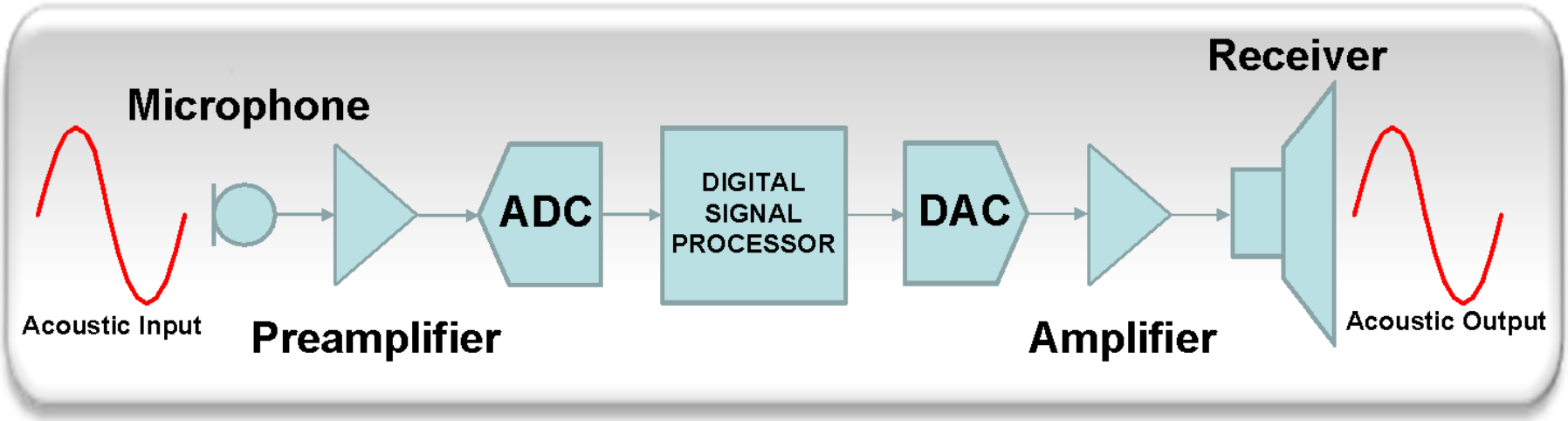

Power Budget Allocation

- **Power dissipation constraints:**
  - **Battery capacity: ~100 mAhr**
  - **Expected lifespan: ≥100 hours**

Size 10

- **Operating power for entire system: 1 mA @ 1.1-1.4 V**
- **Typical average power allocation @ normal ambient signal condition (10-15 dB gain reserve below max output) and 300 Ω receiver:**
  - **Preamplifier and ΔΣ ADC: 200 μW**
  - **DSP: 500 μW**
  - **DAC + Class AB Amplifier + Receiver: 300 μW**

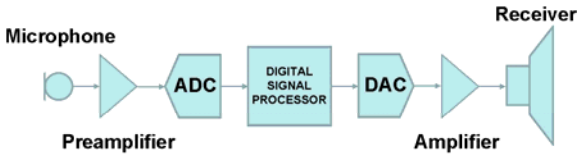

Increasing the Intelligence

More power for the DSP

More algorithms

More intelligent

How to allocate more power for the DSP ?

Use a more efficient amplifier

NANYANG TECHNOLOGICAL UNIVERSITY

Outline

- Hearing Impairment
- Hearing Aids
- Linear Amplifiers
  - Class A
  - Class B
  - Class AB
- Class D Amplifier
- Conclusion

NANYANG TECHNOLOGICAL UNIVERSITY

Linear Amplifiers - Class A

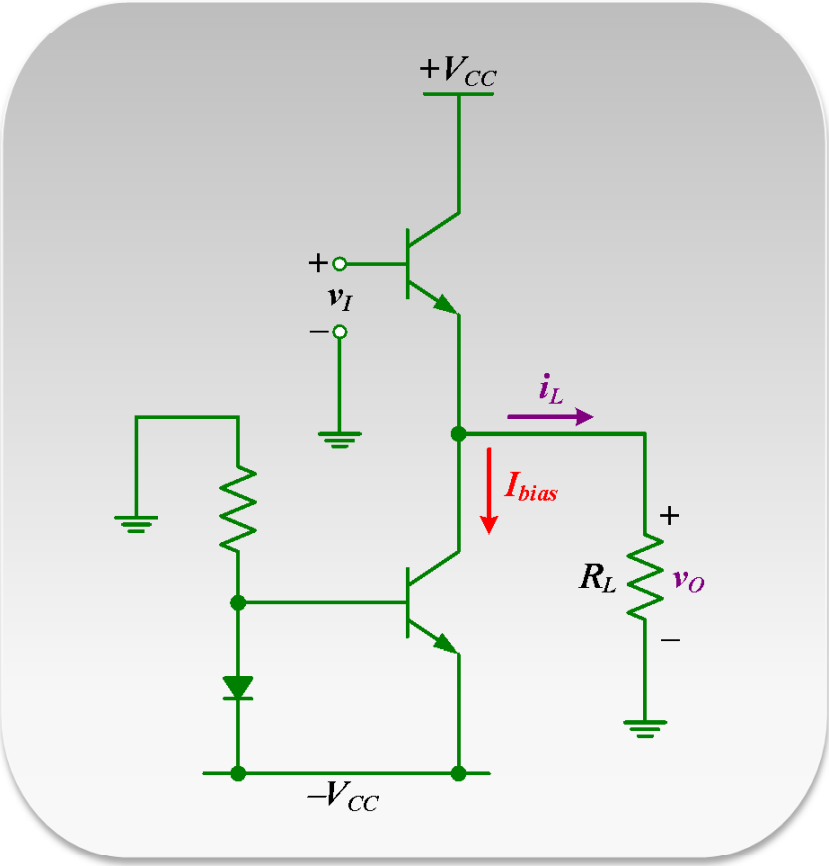

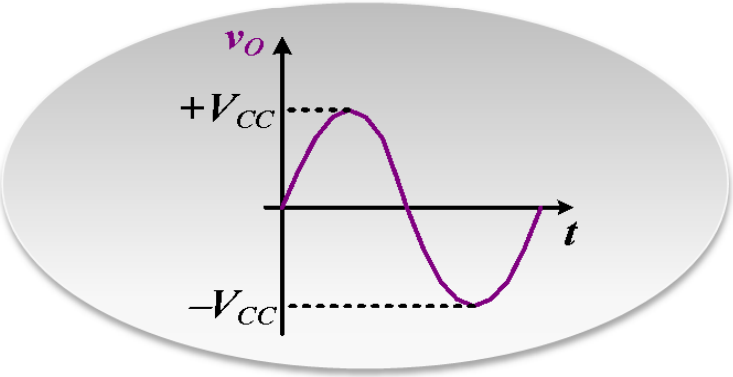

Maximum power efficiency = 25 %

Linear Amplifiers - Class B

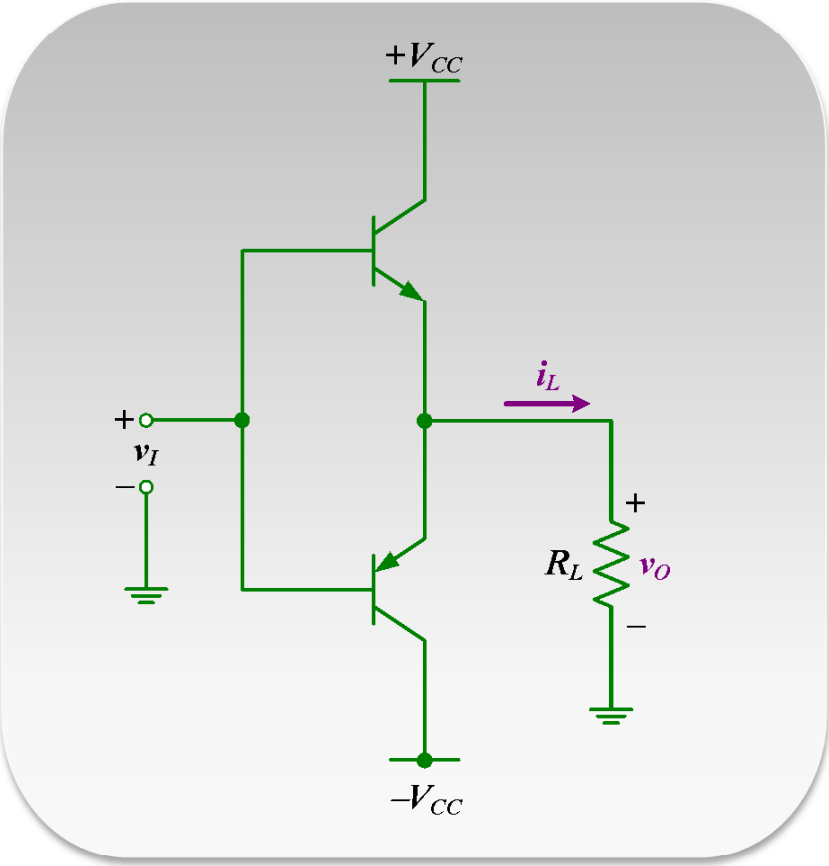

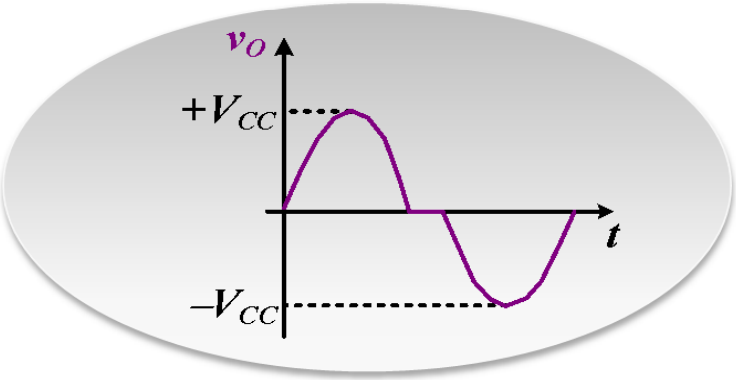

Maximum power efficiency = 78.5 %

Linear Amplifiers - Class AB

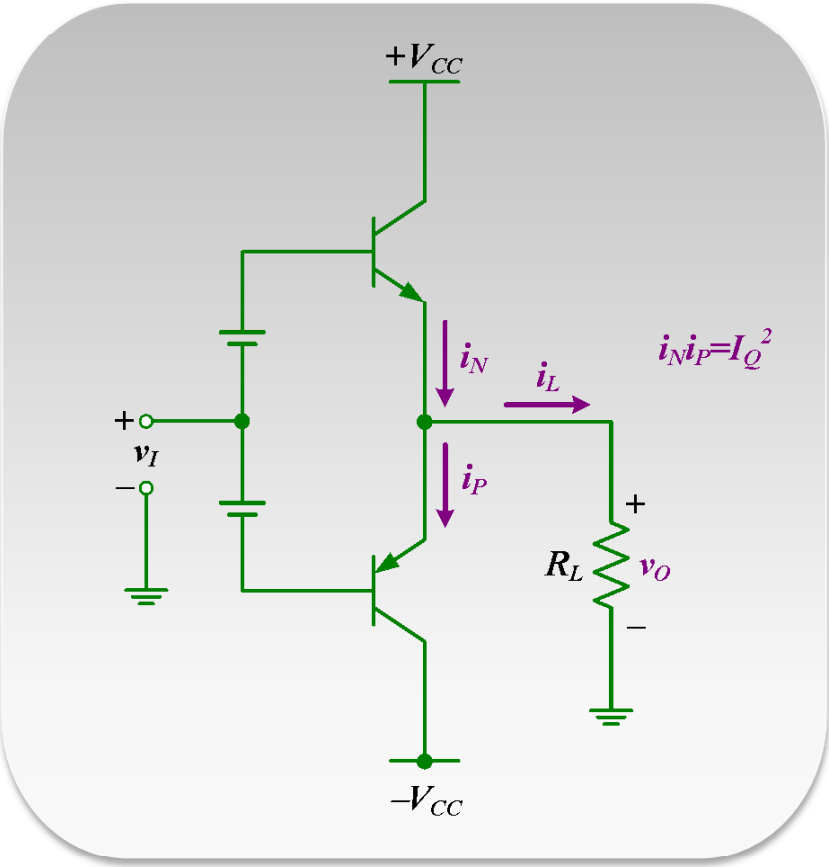

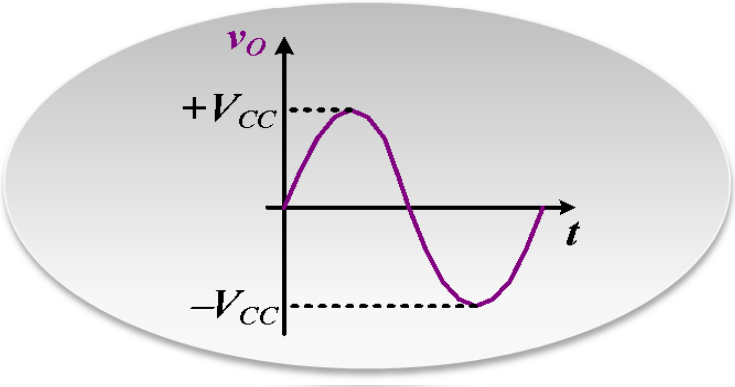

Power efficiency = 25 - 78.5 %

Outline

- Hearing Impairment
- Hearing Aids
- Linear Amplifiers
- Class D Amplifier
  - Digital Class D
  - Modulation Schemes:
    - Pulse Width Modulation
    - Pulse Density Modulation
    - Hybrid Algorithmic PWM & Multi-bit $\Delta\Sigma$ Modulation
  - Prototype Digital Class D Amplifier IC for Hearing Aids
- Conclusion

NANYANG TECHNOLOGICAL UNIVERSITY

Class D Amp is basically Switching Amp

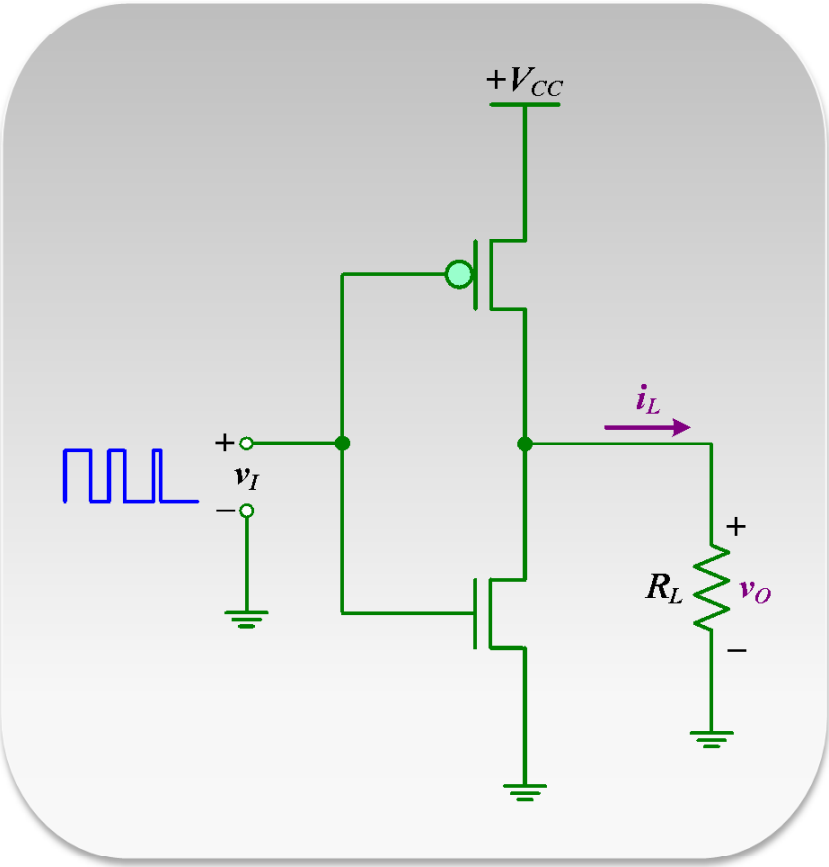

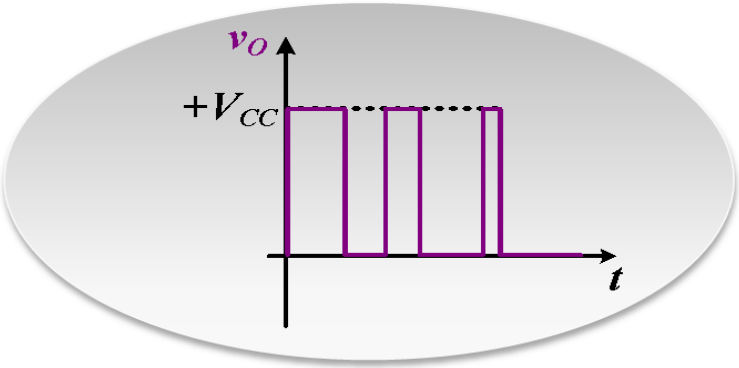

Maximum power efficiency = 100 %

Types of Class D Amplifiers

- Analog Class D: analog modulator
- Digital Class D: digital modulator
- Both are based on either PWM or PDM signals

Basic Output Modulation Schemes

- **Pulse Width Modulation (PWM)**

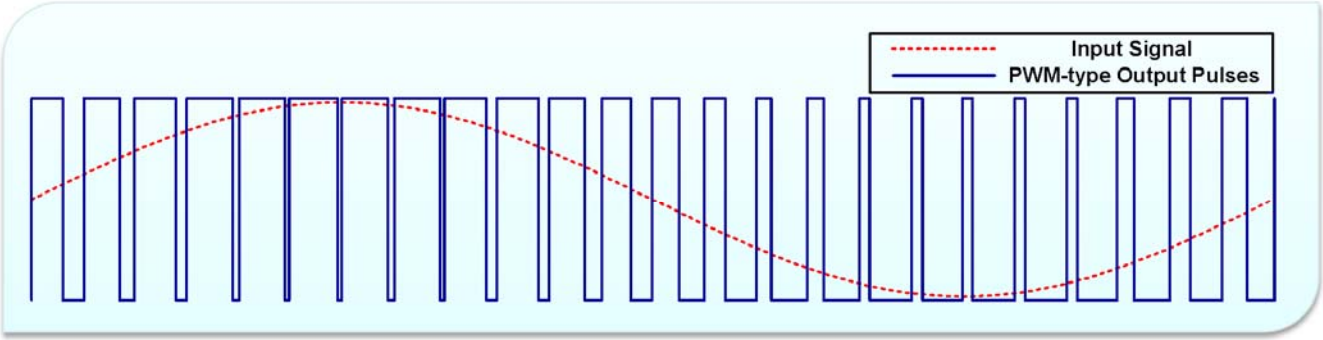

- **Pulse Density Modulation (PDM)**

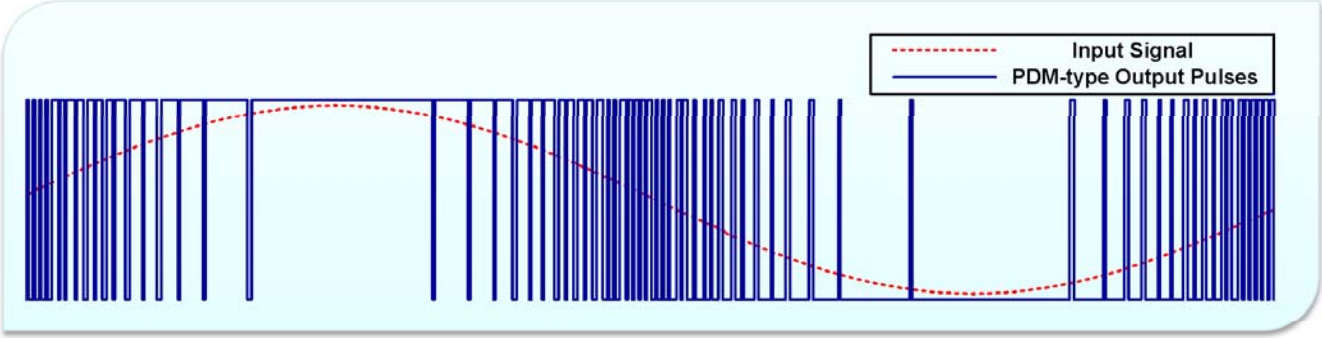

NANYANG TECHNOLOGICAL UNIVERSITY

Advantage of the Digital Class D Amp

- **When interfaced to a DSP…**
  - **Analog Amplifiers (Class A, B, AB, Analog Class D) require a DAC**
    - **Additional IC area**
    - **Additional power dissipation**
    - **Additional noise and distortions**

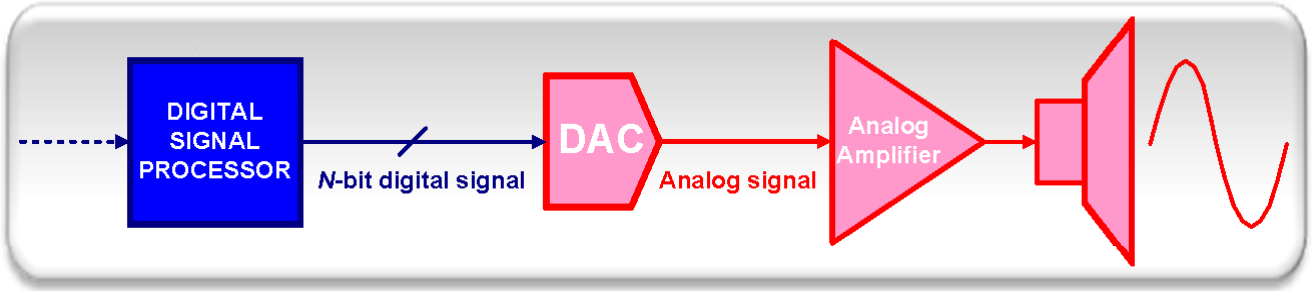

  - **Digital Class D Amplifier does not require a DAC**

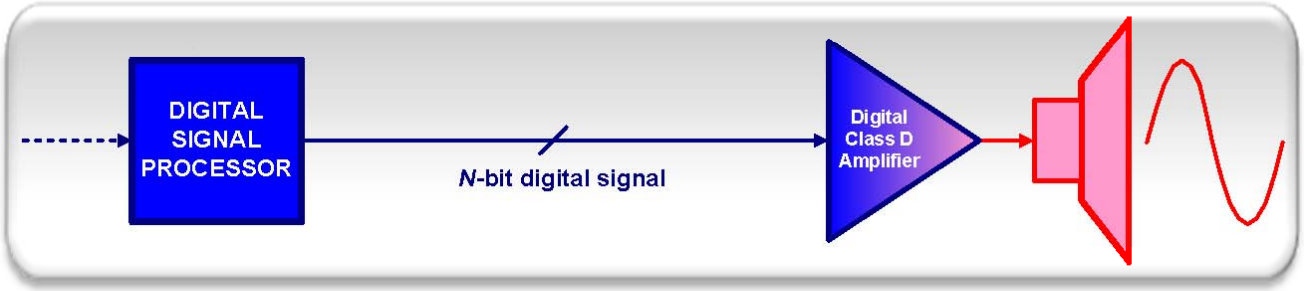

Components of a Digital Class D Amplifier

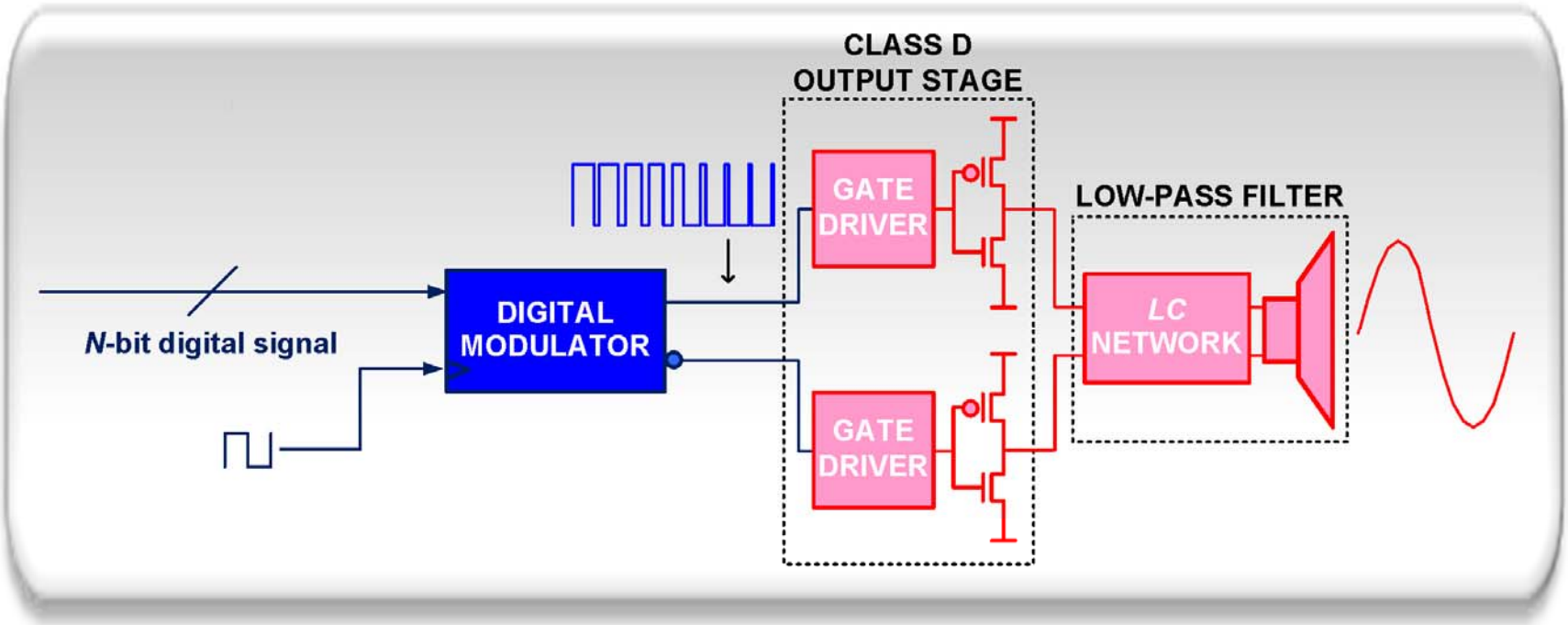

PWM Generation using an Analog Modulator

- **PWM Analog Modulator**

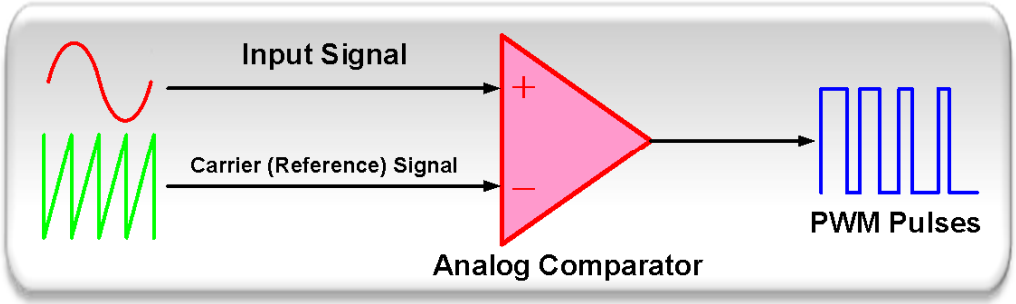

- **Natural Sampling PWM: no error**

zero harmonic distortion

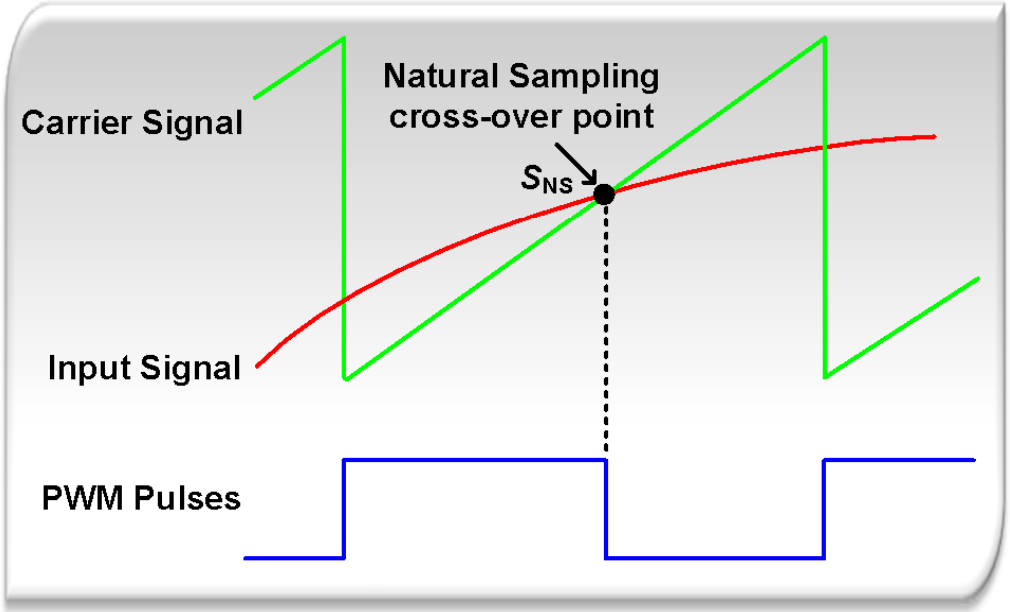

Total Harmonic Distortions + Noise (THD+N)

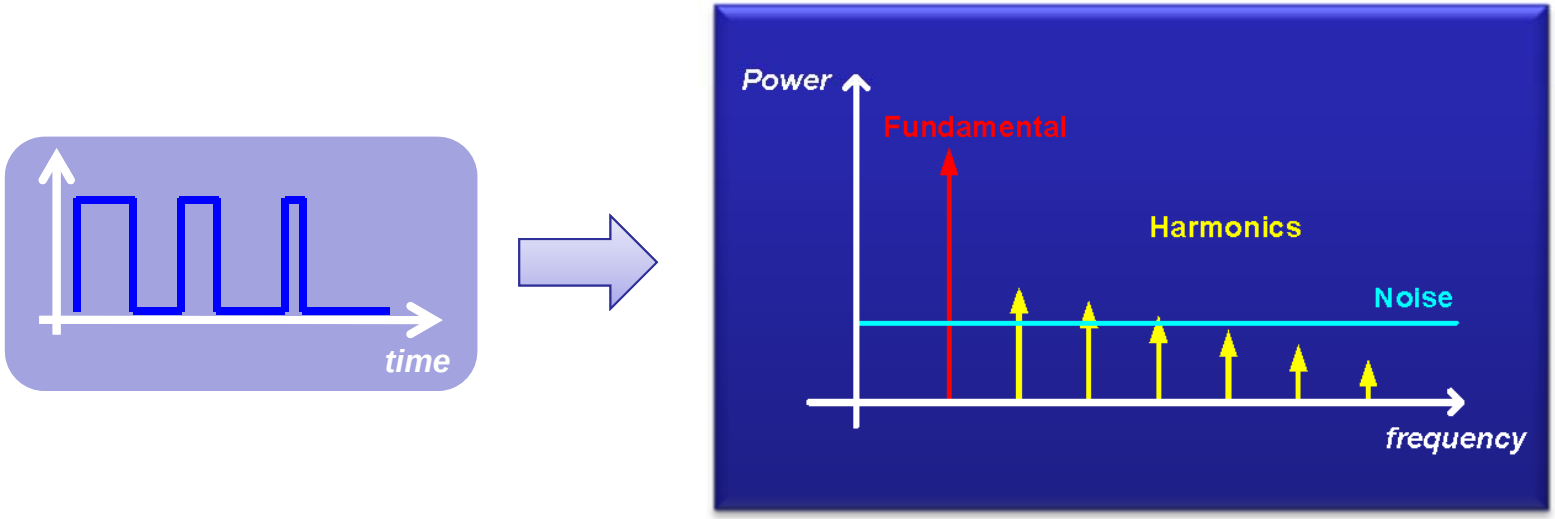

$$\text{THD+N (dB)} = 10\log_{10}\left(\frac{\text{Total power of harmonics + noise}}{\text{Power of fundamental}}\right)$$

$$\text{THD+N (\%)} = 100\,\% \times \left(\frac{\sqrt{\left[\sum_{n=2}^{\lfloor f_{BW}/f_1 \rfloor} P(f_n)\right] + P_{noise}}}{\sqrt{P(f_1)}}\right)$$

PWM Generation using a Digital Modulator

- **Basic method: Uniform Sampling PWM**

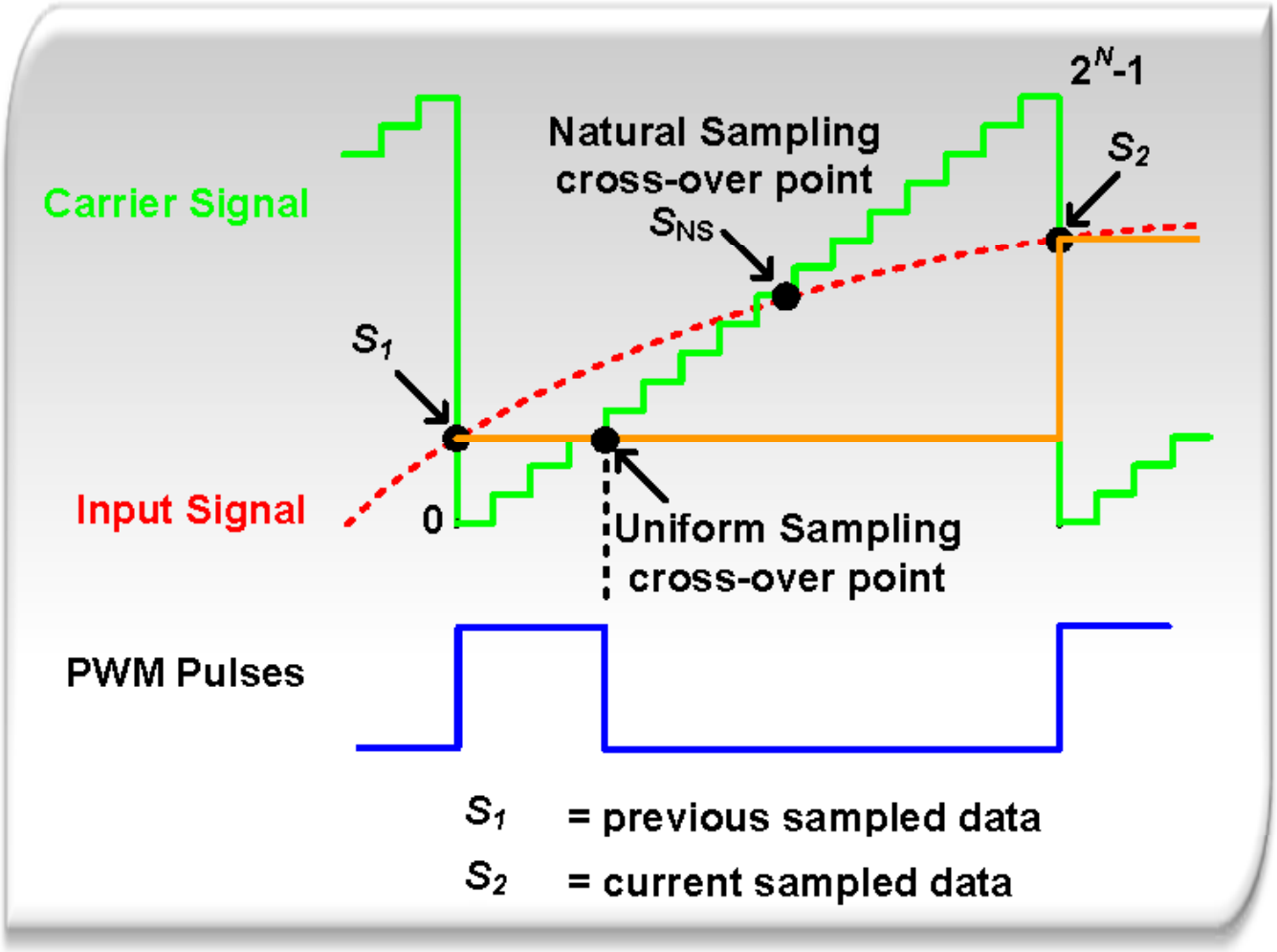

Harmonic Distortions of Uniform Sampling PWM

- **Error in the cross-over point location ⇨ harmonic distortions**
- **THD: -30 dB (3 %) @ input level (M) = 0.9 Full-Scale, input frequency (f_{in}) = 997 Hz, & carrier frequency (f_c)= 48 kHz**
- **Techniques to reduce harmonic distortions:**
  - Interpolation of the input data samples ⇨ oversampling
  - Algorithmic PWM sampling process

NANYANG TECHNOLOGICAL UNIVERSITY

Clock Freq of Uniform Sampling PWM

- **Digital counter requires a fast-clock frequency of 2^N x carrier frequency**
- **Problem:**
  - For N = 16-bit and carrier frequency = 48 kHz, fast-clock frequency will be ~3 GHz!!!

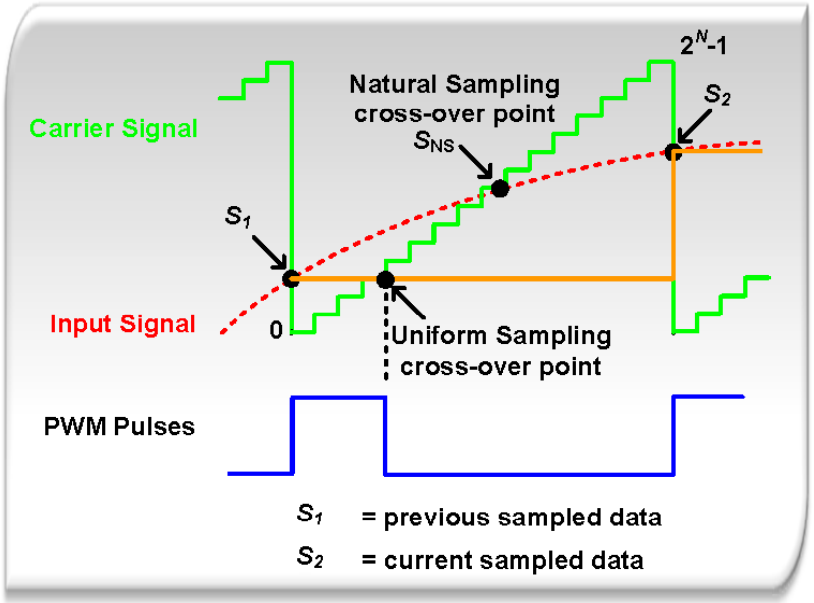

Pulse Density Modulation

- 1-bit $\Delta\Sigma$ Modulation
- $\Delta\Sigma$ Modulation: oversampling & noise-shaping
- Oversampling in digital = interpolation of data

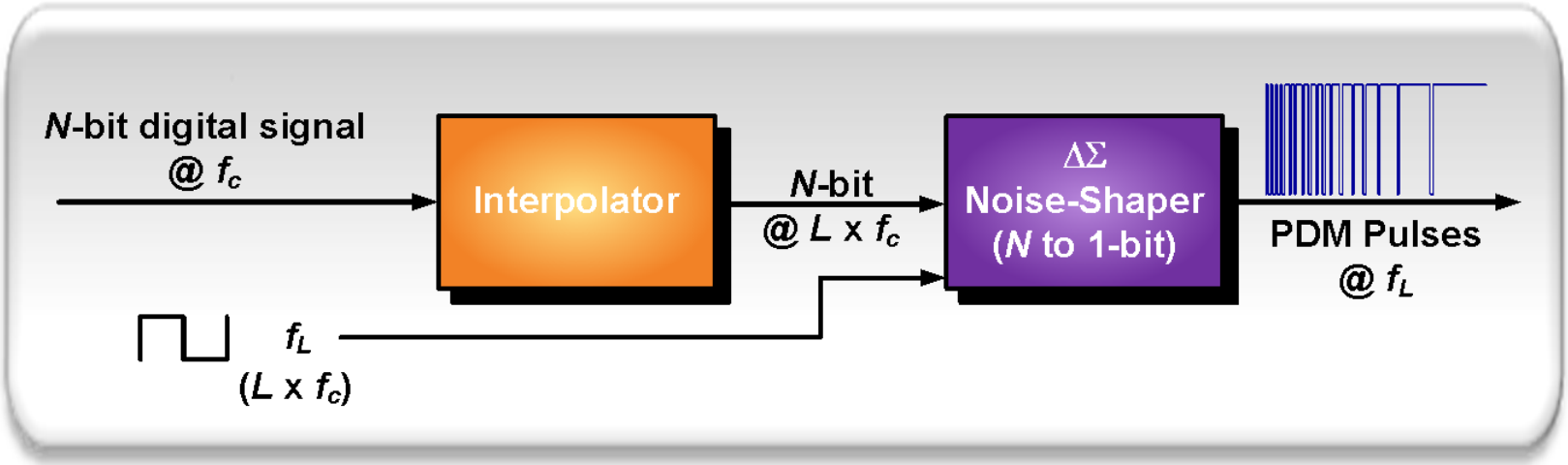

Interpolator

- To interpolate the original sampled input data (increase the input sampling frequency)
- To attenuate the error spectral images by-product

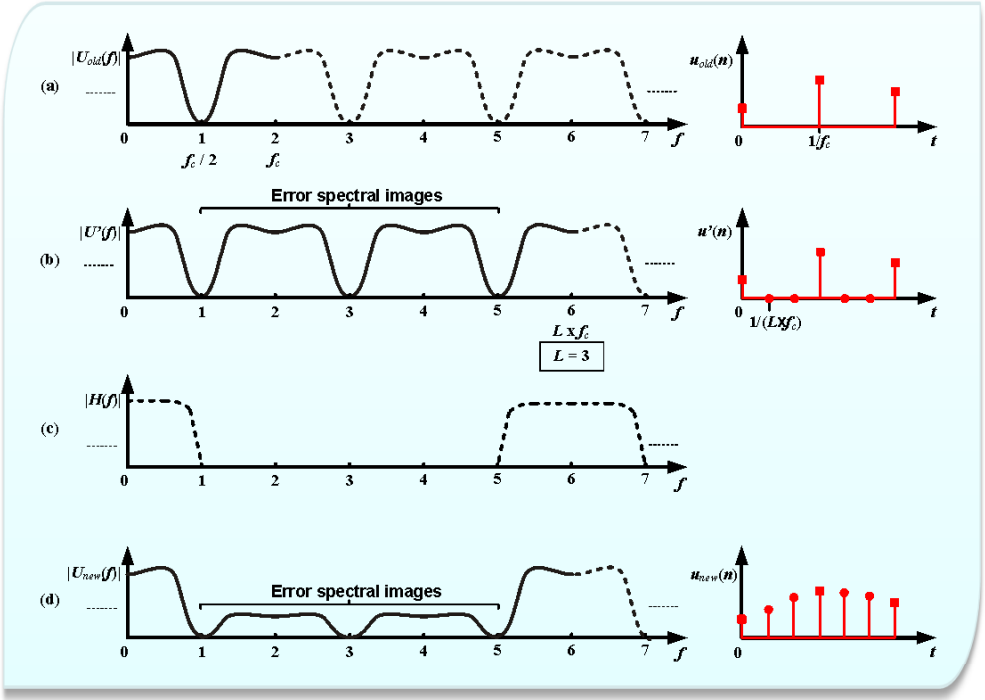

1st-order ΔΣ Noise-Shaper

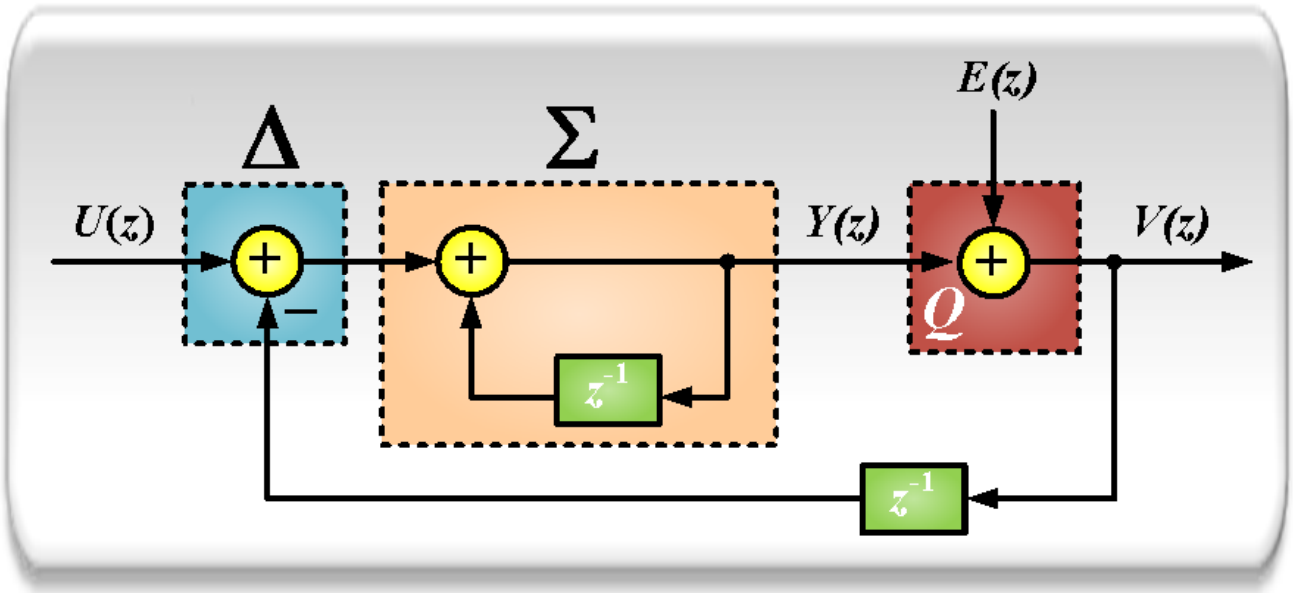

$$V(z) = U(z) + \left(1 - z^{-1}\right)^{K} E(z) \qquad ; K = 1$$

$$= STF(z)U(z) + NTF(z)E(z)$$

K-bit ΔΣ Noise-Shaper: Error-Feedback Structure

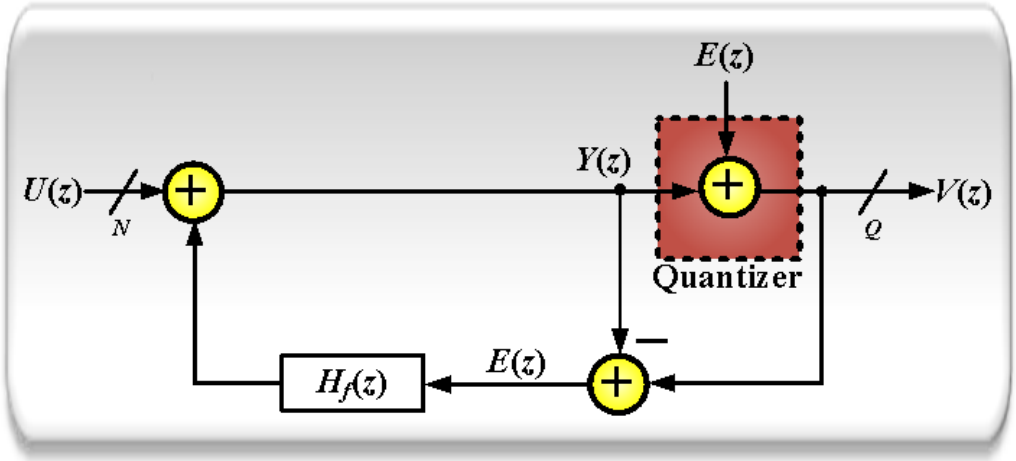

- $$V(z) = U(z) + H_f(z)E(z) + E(z)$$
  $$= U(z) + (1 + H_f(z))E(z)$$
  $$= U(z) + NTF(z)\,E(z)$$
- $$NTF(z) = \left(1 - z^{-1}\right)^K$$
- $$H_f(z) = NTF(z) - 1$$

ΔΣ Noise-Shaper: Signal to Quantization Noise Ratio

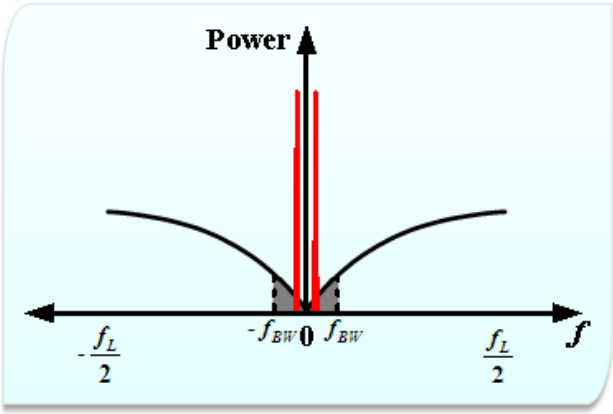

- $$\mathrm{SQNR(dB)} = \left[6.02Q + 1.76\right] + 20\log(M) + 10\log\left(\frac{2K+1}{\pi^{2K}}\right) + (2K+1)10\log(L)$$

- Prototype IC: Q = 8, K = 3, L= 6. At M = 0.9 FS:
  - Theoretical SQNR = 82 dB
  - Theoretical THD+N = -77 dB

ΔΣ Spectrum

- For PDM, $Q = 1 \rightarrow$ requires either:
  - High L (oversampling ratio), or
  - High-order noise-shaper

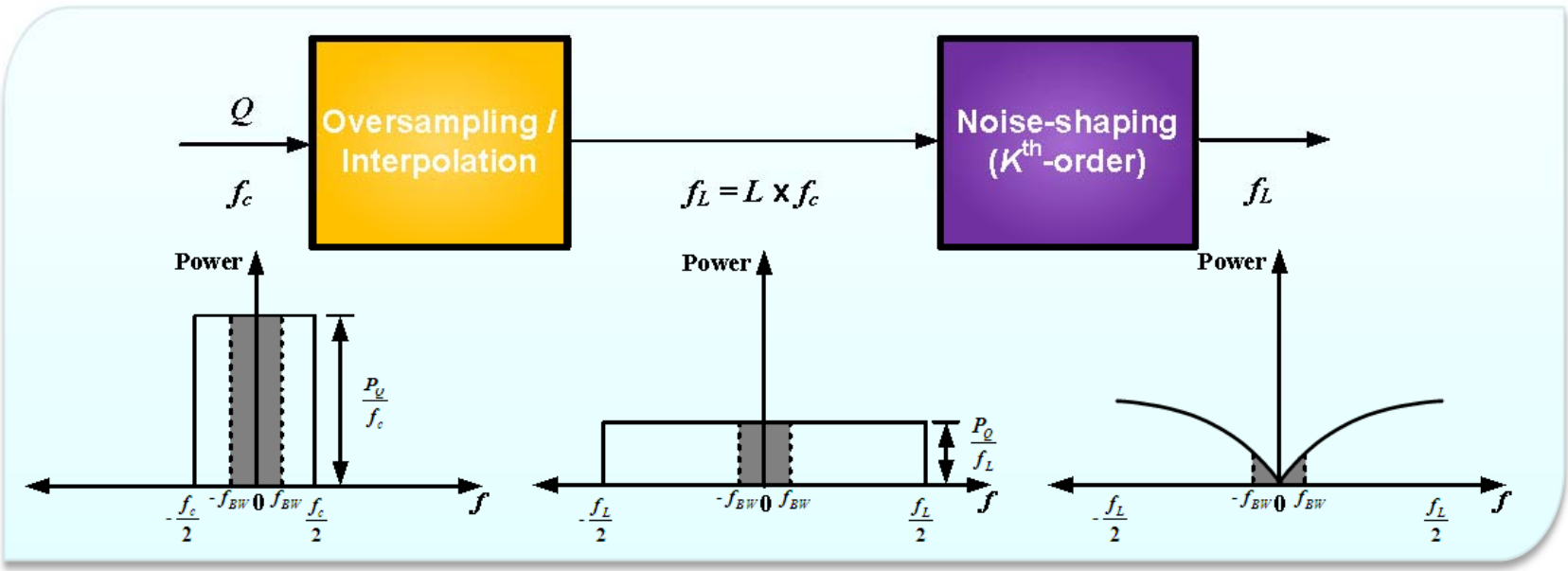

Hybrid Algorithmic PWM & Multi-bit ΔΣ Modulation

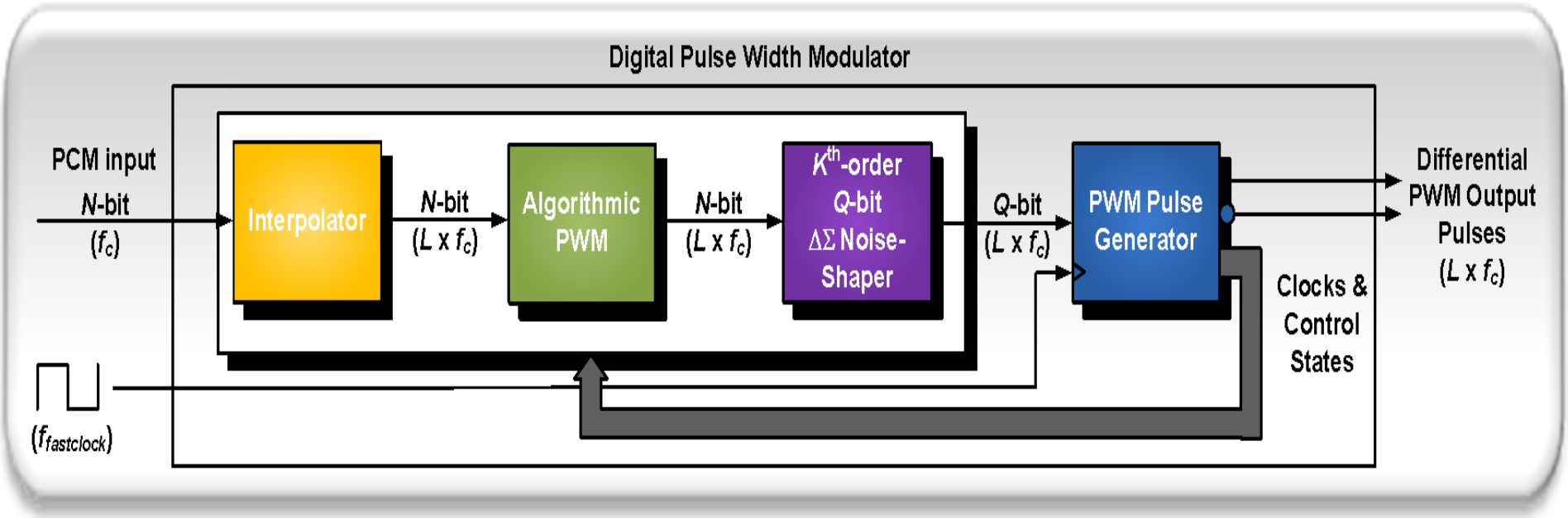

PWM Pulse Generator

- To convert the *Q*-bit digital data from the ΔΣ Noise-Shaper into the PWM pulses

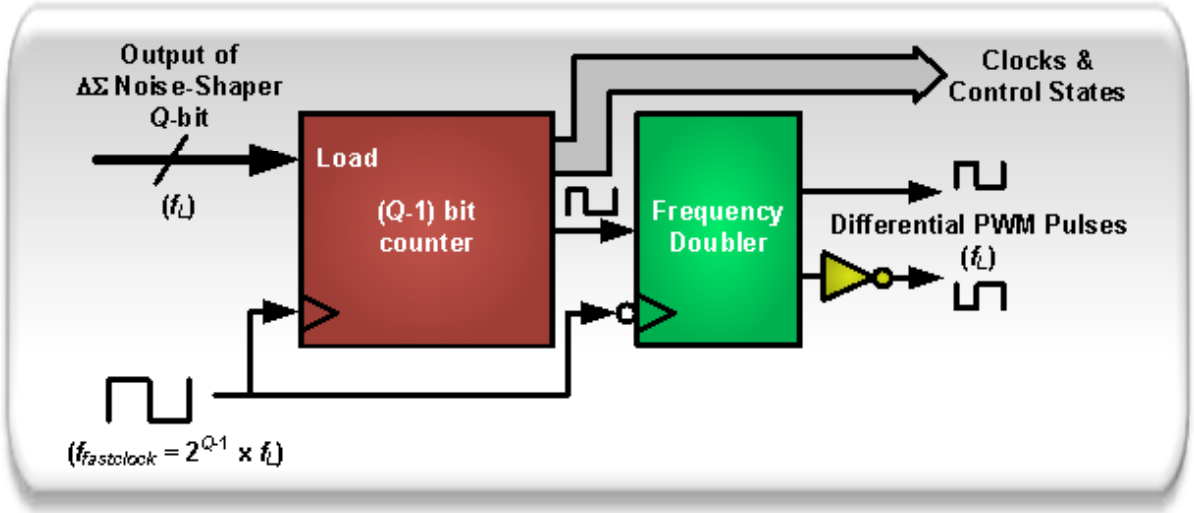

- Counter: also function as a frequency divider
- Proposed frequency doubler: halve the required $f_{fastclock}$ to $2^{Q-1} \times f_L$

NANYANG TECHNOLOGICAL UNIVERSITY

Frequency Doubler

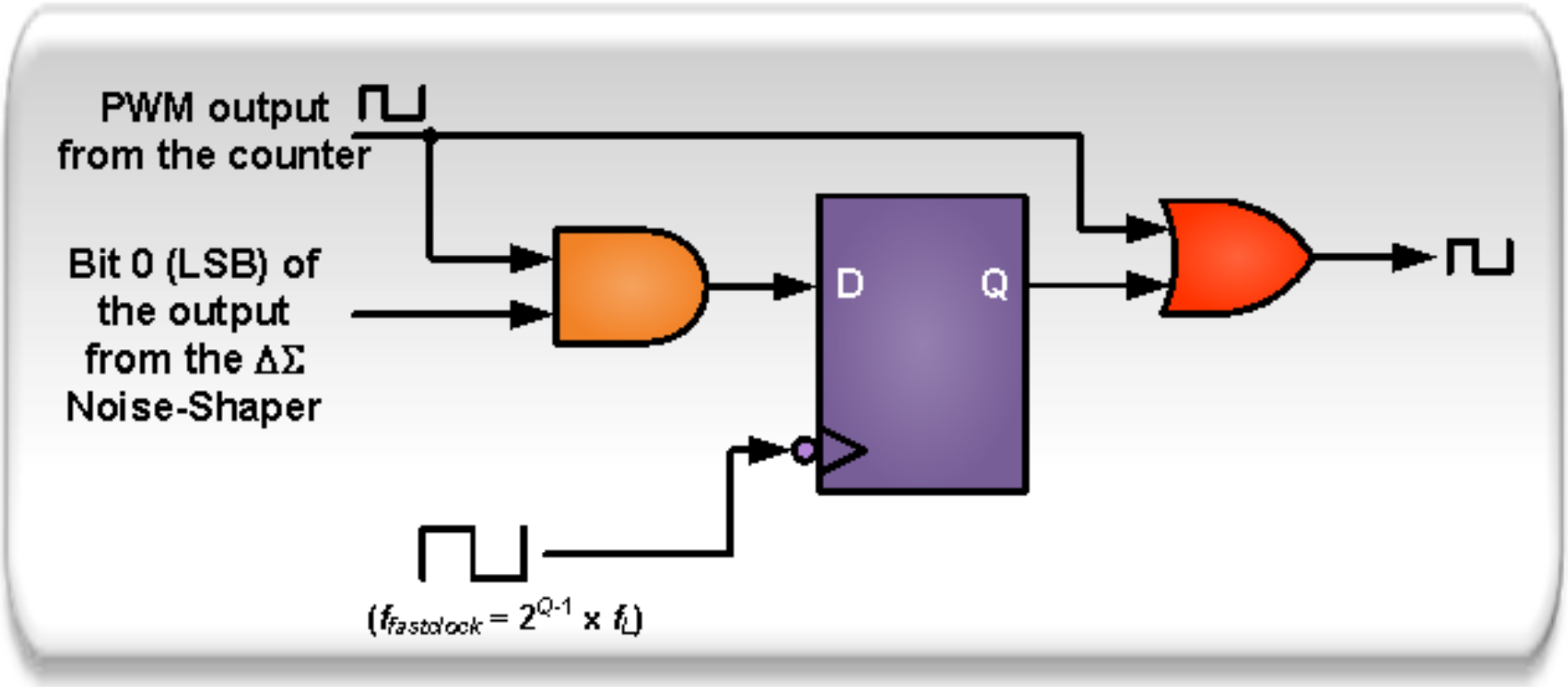

PWM Pulse Generator – depending on *Q*

Q (bit)	SNR (dB)	$f_{fastclock}$ (MHz)	Average Power Dissipation (μW)
7	76	6	3
8	82	12	6
9	88	24	12
10	94	49	26

At 0.35 μm CMOS process & 1.1 V power supply

NANYANG TECHNOLOGICAL UNIVERSITY

Simulation and Experimental Results

Simulation (*M* = 0.9 FS)

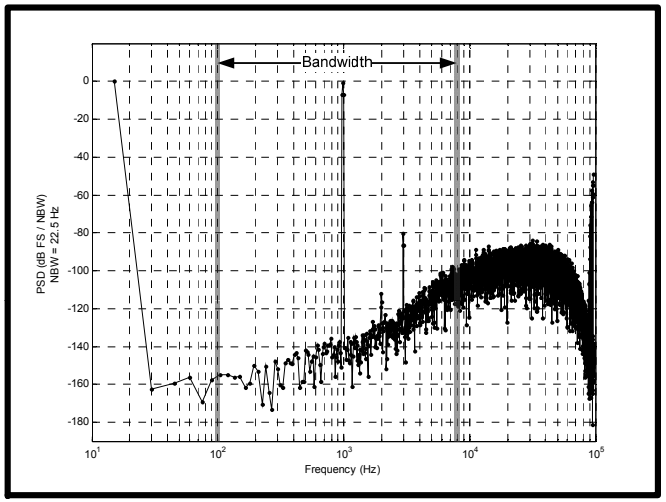

- **Performance:**
  - THD+N: -78 dB
  - Average THD+N (*M* = 0.1 FS to 0.9 FS): -75 dB
- **Power Dissipation at 1.1 V:**
  - Average: 25 μW
  - Quiescent: 18 μW

Experimental (*M* = 0.9 FS)

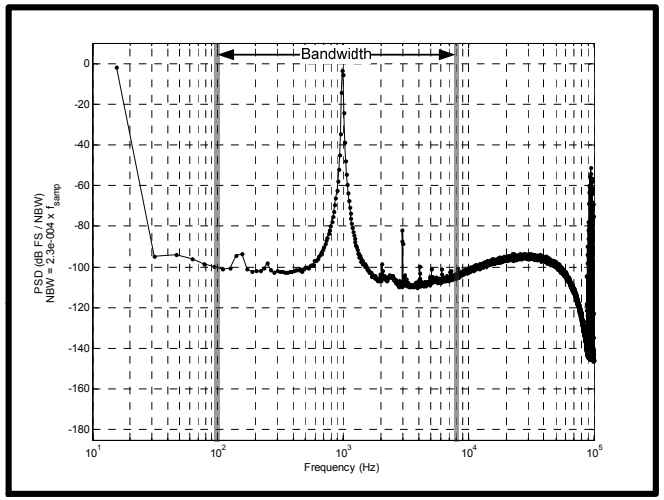

- **Performance:**
  - THD+N: -74 dB (0.02 %)
  - Average THD+N (*M* = 0.1 FS to 0.9 FS): -70 dB (0.03 %)
- **Power Dissipation at 1.1 V:**
  - Average: 28 μW
  - Quiescent: 20 μW

NANYANG TECHNOLOGICAL UNIVERSITY

Algorithmic PWM

- To improve the linearity of the Uniform Sampling PWM (THD: -30 dB (3 %) at M = 0.9 FS and f_c = 48 kHz)
- Cross-point deriver: estimate the Natural Sampling cross-over point (e.g. δC PWM[1], LI PWM[2])
- Linear Interpolation PWM (LI PWM): THD = -67 dB (0.04 %)
- Combined 1st & 2nd-order Lagrange Interpolations Sampling PWM: THD = -79 dB (0.01 %)

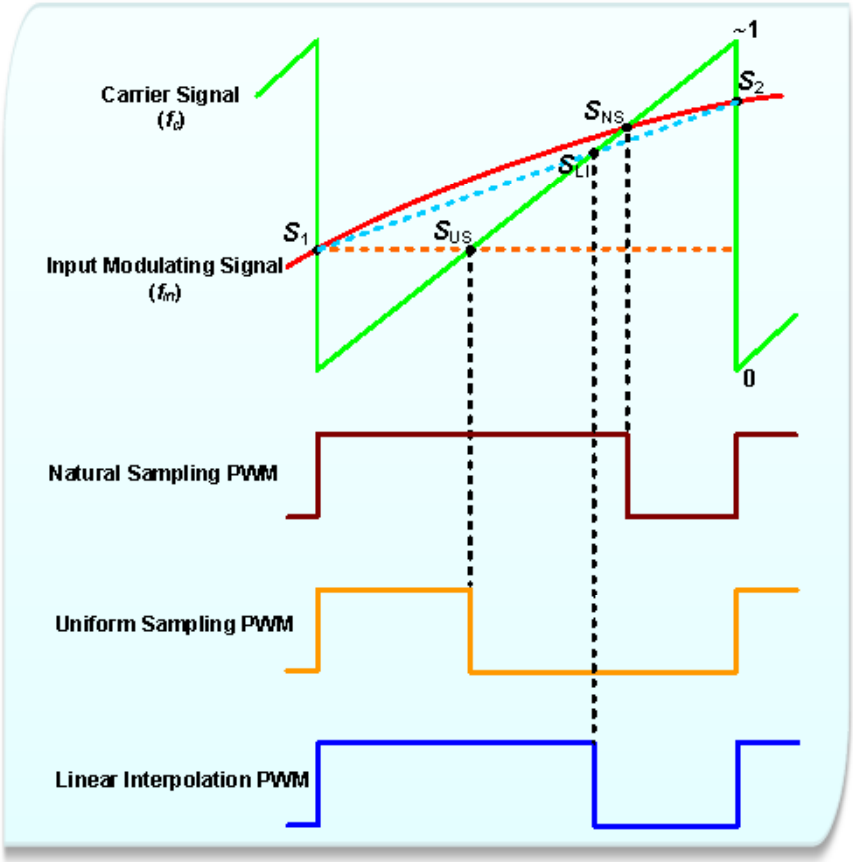

[1] B.-H. Gwee, J.S. Chang, and Huiyun L., "A micropower low-distortion digital pulsewidth modulator for a digital class D amplifier", *IEEE Transactions on Circuits and Systems II: Analog and Digital Signal Processing (Regular Paper)*, 2002.

[2] B.-H. Gwee, J.S. Chang, and V. Adrian, "A micropower low-distortion digital class-D amplifier based on an algorithmic pulsewidth modulator", *IEEE Transactions on Circuits and Systems I: Fundamental Theory and Applications (Regular Paper)*, 2005.

Prototype Digital Class D Amplifier IC

- Fabricated in 0.35 μm CMOS process
- Core area: 0.46 mm^2
- $f_{fastclock}$ = 12 MHz
- Q = 8
- Output frequency = 96 kHz
- Measured THD+N: -74 dB (0.02 %) at M = 0.9 FS (typical THD of hearing aids: -40 dB or 1 %)
- Measured average power dissipation: 28 μW at 1.1 V

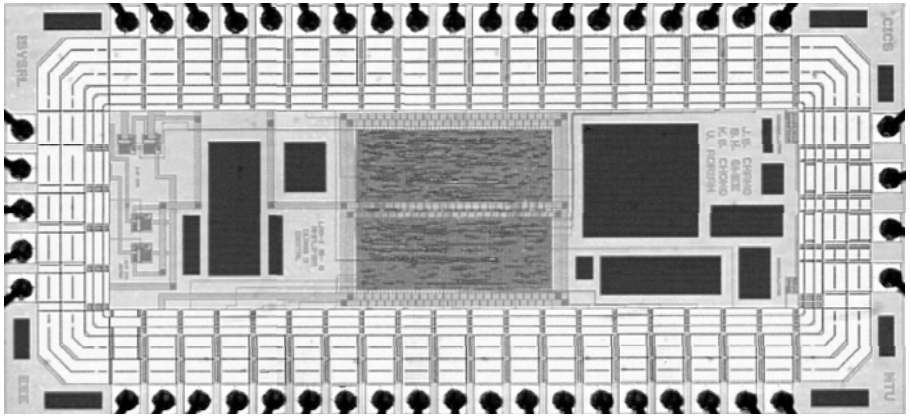

V. Adrian, J.S. Chang, and B.-H. Gwee, "A low voltage micropower digital Class D amplifier modulator for hearing aids", *IEEE Transactions on Circuits and Systems I: Regular Papers, 2009.*

Conclusions

- **Class D amplifier:**
  - **Power efficient**
  - **More power for DSP of a hearing aid**
- **Advantage of digital Class D amplifier: no DAC**
- **US PWM: high THD and high fast-clock frequency**
- **PDM 1-bit $\Delta\Sigma$: high oversampling ratio and high order noise-shaper**
- **Hybrid Algorithmic PWM & Multi-bit $\Delta\Sigma$ Modulation: lower THD, lower fast-clock frequency, lower oversampling ratio, and lower order noise-shaper**

NANYANG TECHNOLOGICAL UNIVERSITY

Some selected publications:

1. V. Adrian, J.S. Chang and B.H. Gwee, "A Randomized Wrapped-Around Pulse Position Modulation Scheme for DC-DC Converters," IEEE Transactions on Circuits and Systems I: Regular Paper, accepted for publication, 2010.
2. V. Adrian, J.S. Chang and B.H. Gwee, "A Low Voltage Micropower Digital Class D Amplifier Modulator for Hearing Aids," *IEEE Transactions on Circuits and Systems I: Regular Paper*, v56, n2, pp. 337-349, Feb 2009.
3. K.S. Chong, B.H. Gwee and J.S. Chang, "Energy-Efficient Synchronous-Logic and Asynchronous-Logic FFT/IFFT Processors," *IEEE Journal of Solid State Circuits*, (Regular Paper), v42, n9, pp. 2034-2045, Sep 2007.
4. K.S. Chong, B.H. Gwee and J.S. Chang, "Energy-Efficient Synchronous-Logic and Asynchronous-Logic FFT/IFFT Processors," *IEEE Journal of Solid State Circuits*, (Regular Paper), v42, n9, pp. 2034-2045, Sep 2007.
5. K.S. Chong, B.H. Gwee and J.S. Chang, "A 16-Channel Low Power Non-Uniform Spaced Filter Bank Core for Digital Hearing Aids," *IEEE Transactions on Circuits and Systems II: Express Briefs*, vol. 53, no. 9, pp. 853-857, 2006.
6. B.H. Gwee, J.S. Chang and V. Adrian, "A Micropower Low Distortion Digital Class D Amplifier based on an Algorithmic Pulse Width Modulator," *IEEE Transactions on Circuits and Systems I: Regular Paper*, vol.52, no. 10, pp. 2007-2022, Oct 2005.
7. K.S. Chong, B.H. Gwee and J.S. Chang, "A Micropower Low-Voltage Low Power Multiplier with Reduced Spurious Switching," *IEEE Transactions on Very Large Scale Integration Systems*, (Regular Paper), vol. 13, no. 2, pp. 255-265, Feb 2005.
8. M.T. Tan, J.S. Chang, H.C. Chua and B.H. Gwee, "An Investigation into the Parameters Affecting THD in Low-voltage Low-Power Class D Amplifier," *IEEE Transactions on Circuits and Systems I: Fundamental Theory and Applications*, (Regular Paper), vol. 50, no. 10, pp. 1304-1315, Oct 2003.
9. B.H. Gwee, J.S. Chang and H.Y. Li, "A Micropower Low-Distortion Digital Pulsewidth Modulator for a Digital Class D Amplifier," *IEEE Transactions on Circuits and Systems II: Analog and Digital Signal Processing* (Regular Paper), vol. 49, no. 4, pp. 245-256, Apr 2002.

thank you

NANYANG TECHNOLOGICAL UNIVERSITY