RF Pre-Distortion for Linearizing Power Amplifiers

Rajeev Krishnamoorthy
rajeev@scintera.com
May, 2013

Company Background

What do we do? And why?

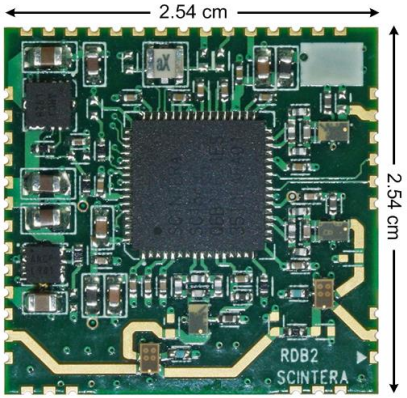

What: Adaptive pre-distortion to linearize RF power amplifiers

- RF Power Amplifier Linearizer (RFPAL)
- Reduce distortion to increase PA efficiency and useable output power
- Lower system cost & reduce design time
- Target cellular wireless and microwave

How

- Single-chip programmable, high-performance, analog signal processing platform; lower power consumption and much lower cost (vs. DPD)
- Compute & Adapt in the digital domain, Apply in the analog/RF domain
- Programmability of digital; the simplicity, cost, size and power of analog

Why

- **Higher PAR Waveforms**: the move to more complex modulation schemes, multi-carrier systems, time-slotted waveforms, etc. increase signal variability (peak-to-average ratio)
- **New Devices & Systems**: A variety of PA architectures and transistor technologies put increasing demands on linearity & efficiency
- **Cost**: Push to lower CAPEX and OPEX
  - Electric bills is a non-trivial component of expenses
  - Current digital solutions are expensive, large, and power-hungry, and require integration from BB to PA.

Company Timeline

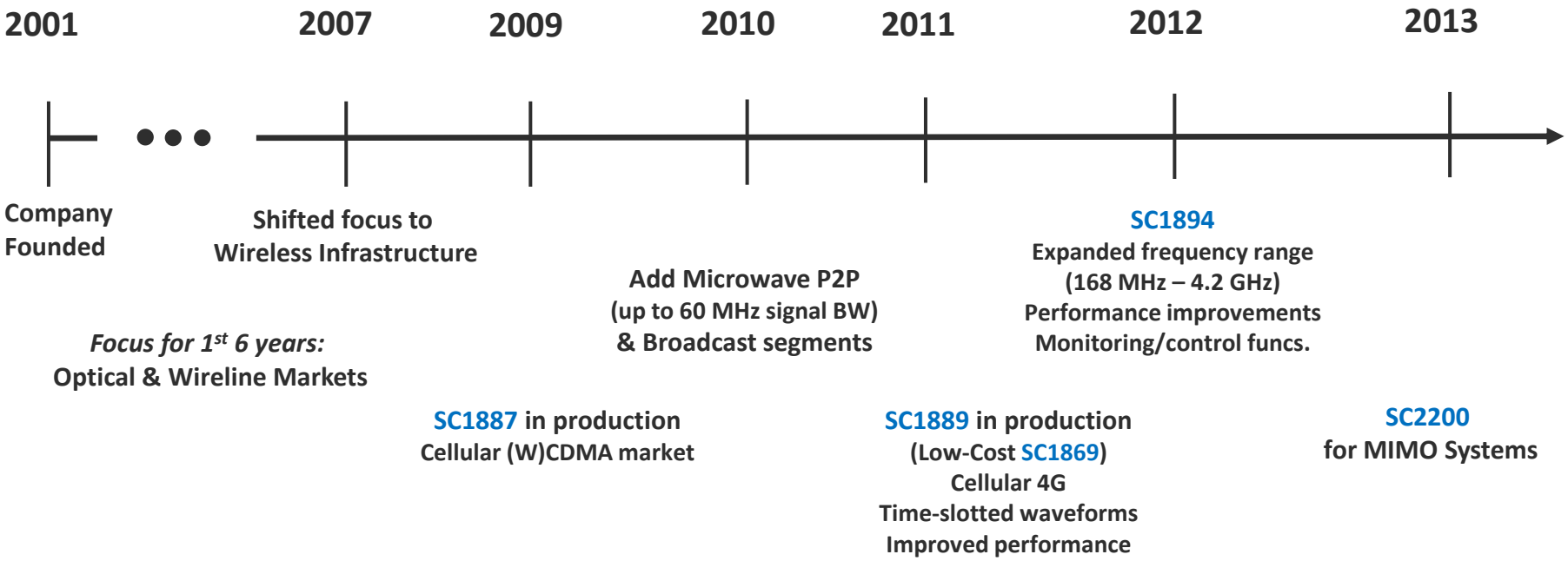

Technology & Product

Power Amplifiers & the Need to Linearize

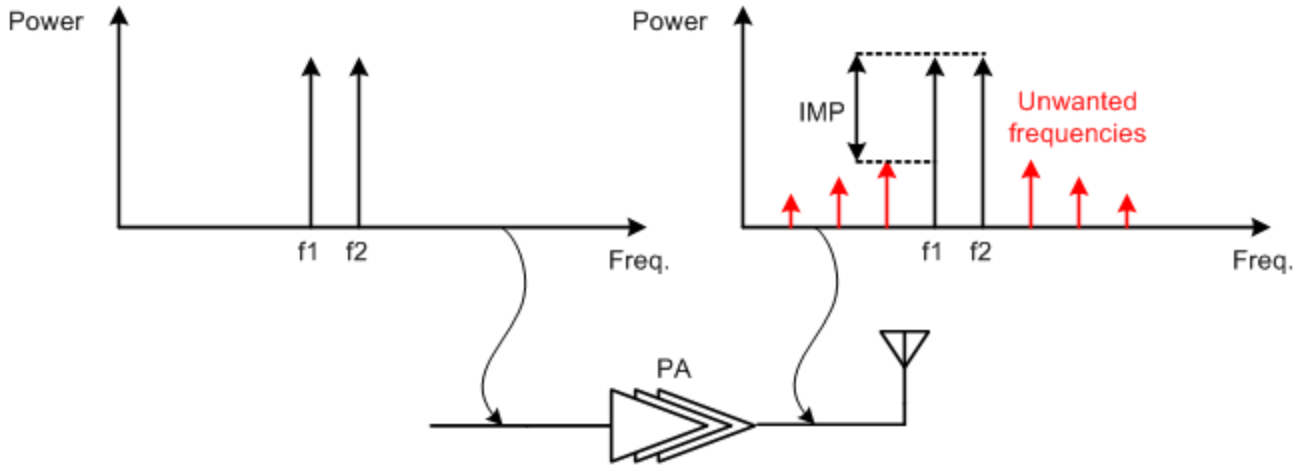

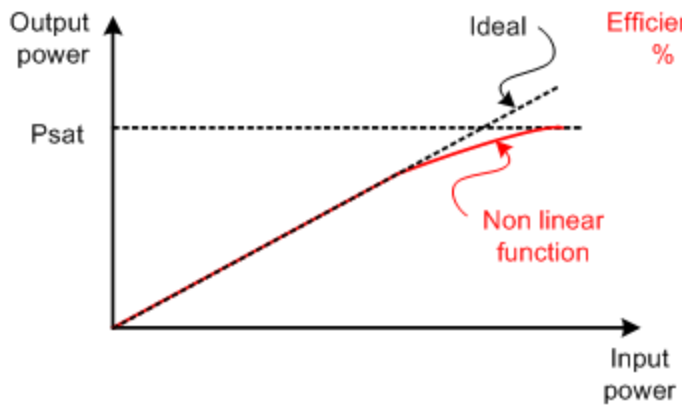

PA output power (dBm) vs. input power (dBm)

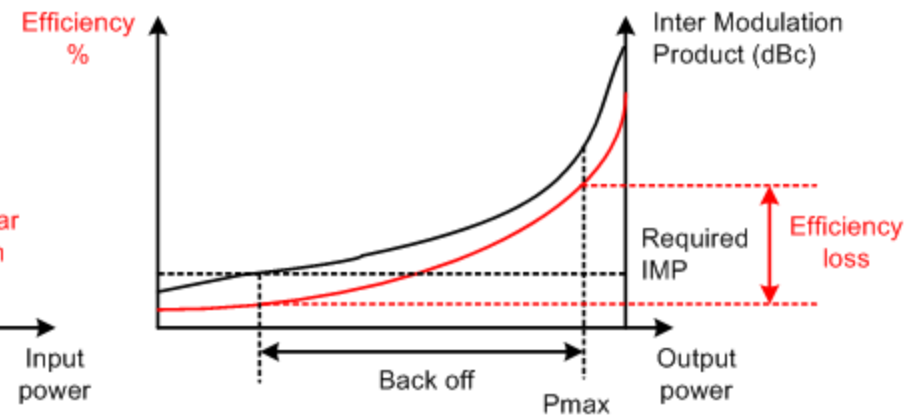

Efficiency (%) and Inter Modulation Product (dBc) vs. output power (dBm)

Predistortion Principle

No predistorion

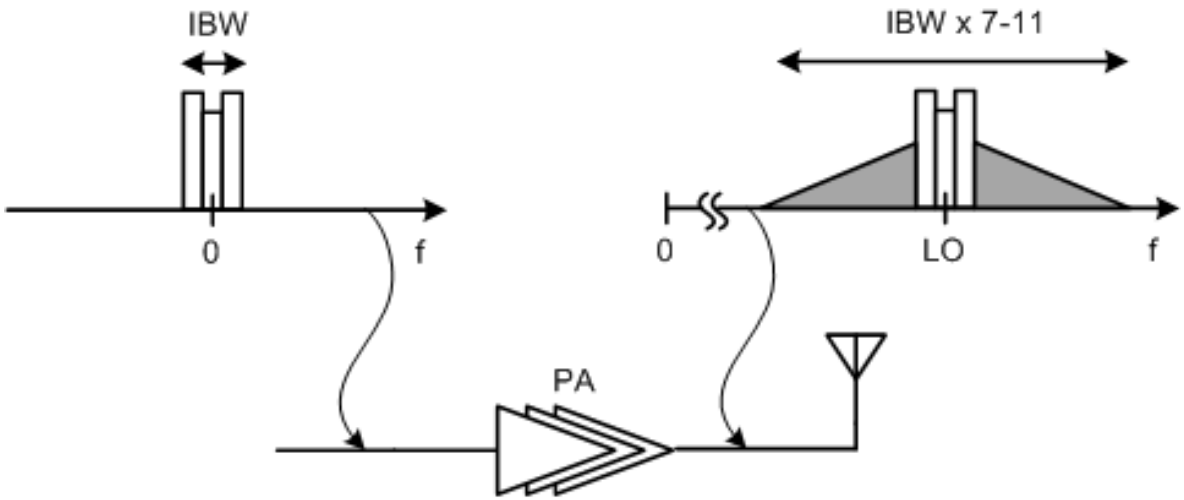

With predistorion

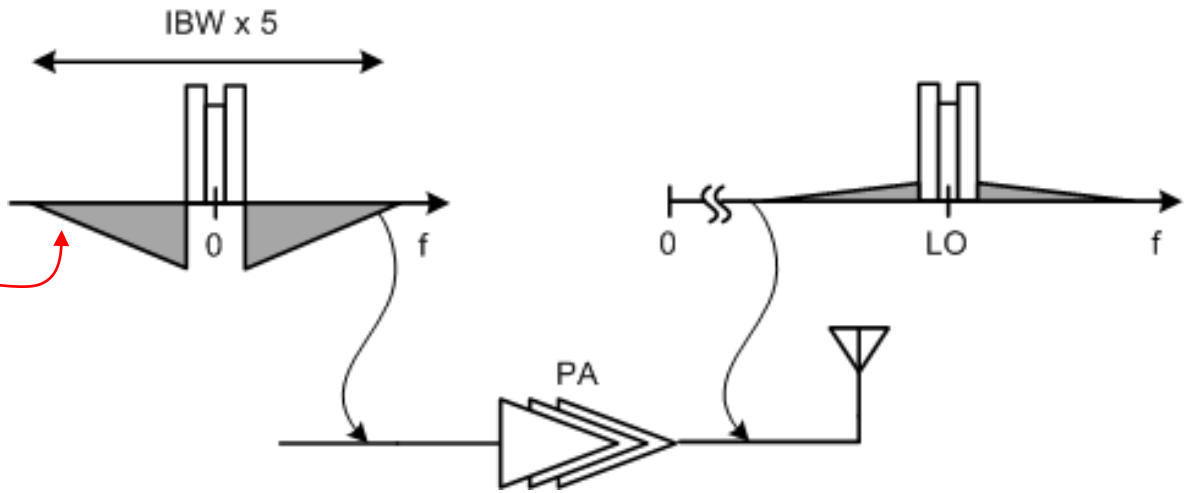

5-10 x BW expansion

Digital Pre-Distortion (DPD)

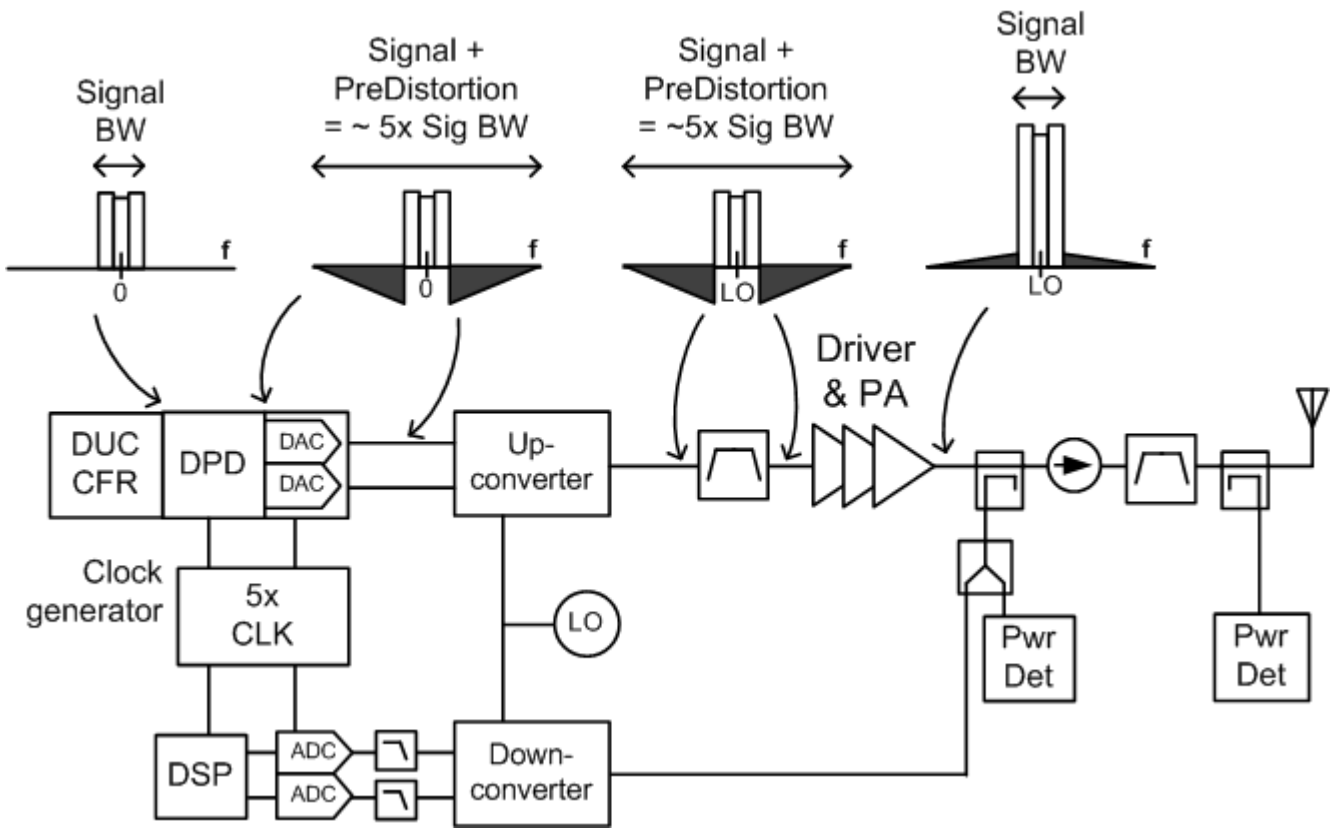

Benefits

- Programmable, customizable for particular application, control

Challenges

- High power consumption, high frequency reconstruction filter, wide band up-mixer, challenging clock generation to achieve converters SNR, lack of modularity, cost…

RFPAL (RF PA Linearization)

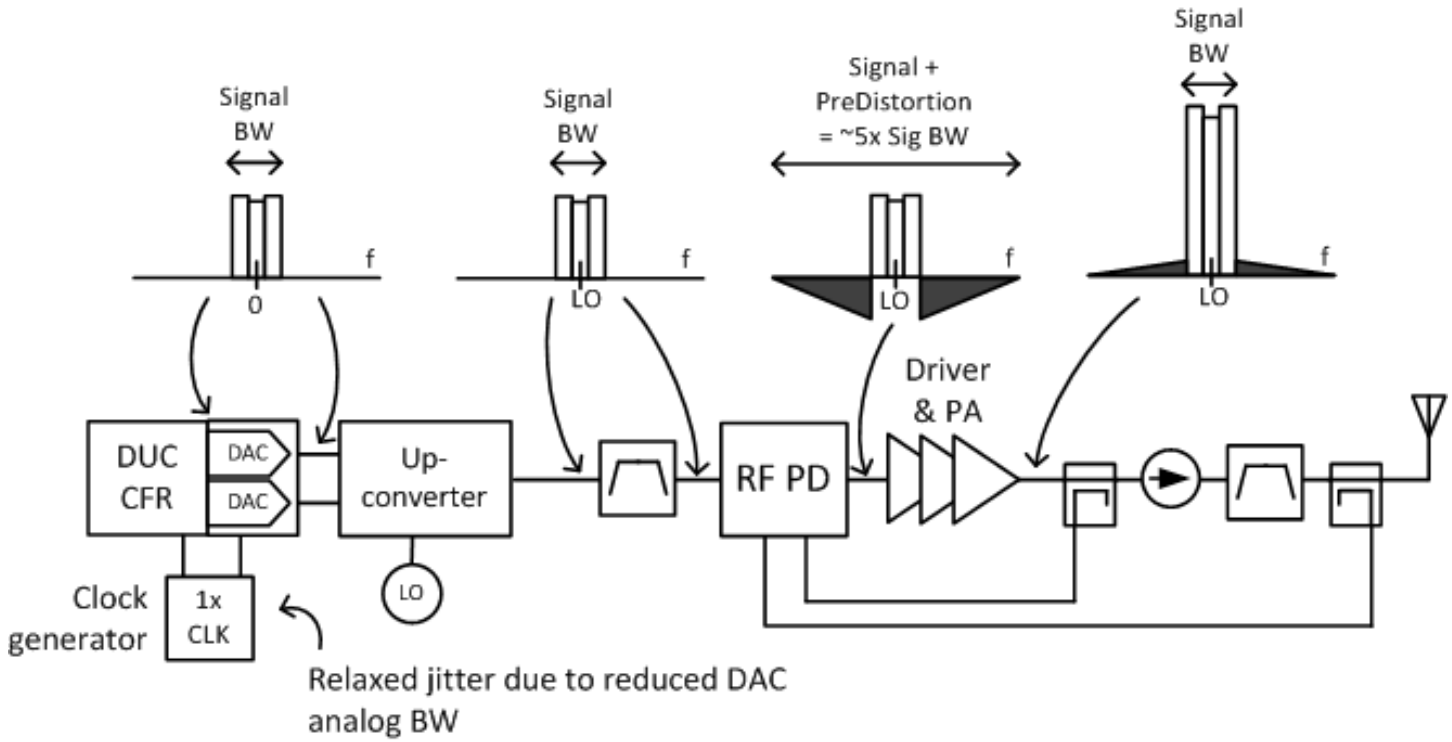

Benefits:

- Lower power digital processor, easy reconstruction filter, relaxed up-mixer requirements, low power, low cost, easy to use; feedback path fully integrated; DAC only need transmit at 1x signal bandwidth

Challenges

- Potentially … degree of control for end user

RFPAL Application

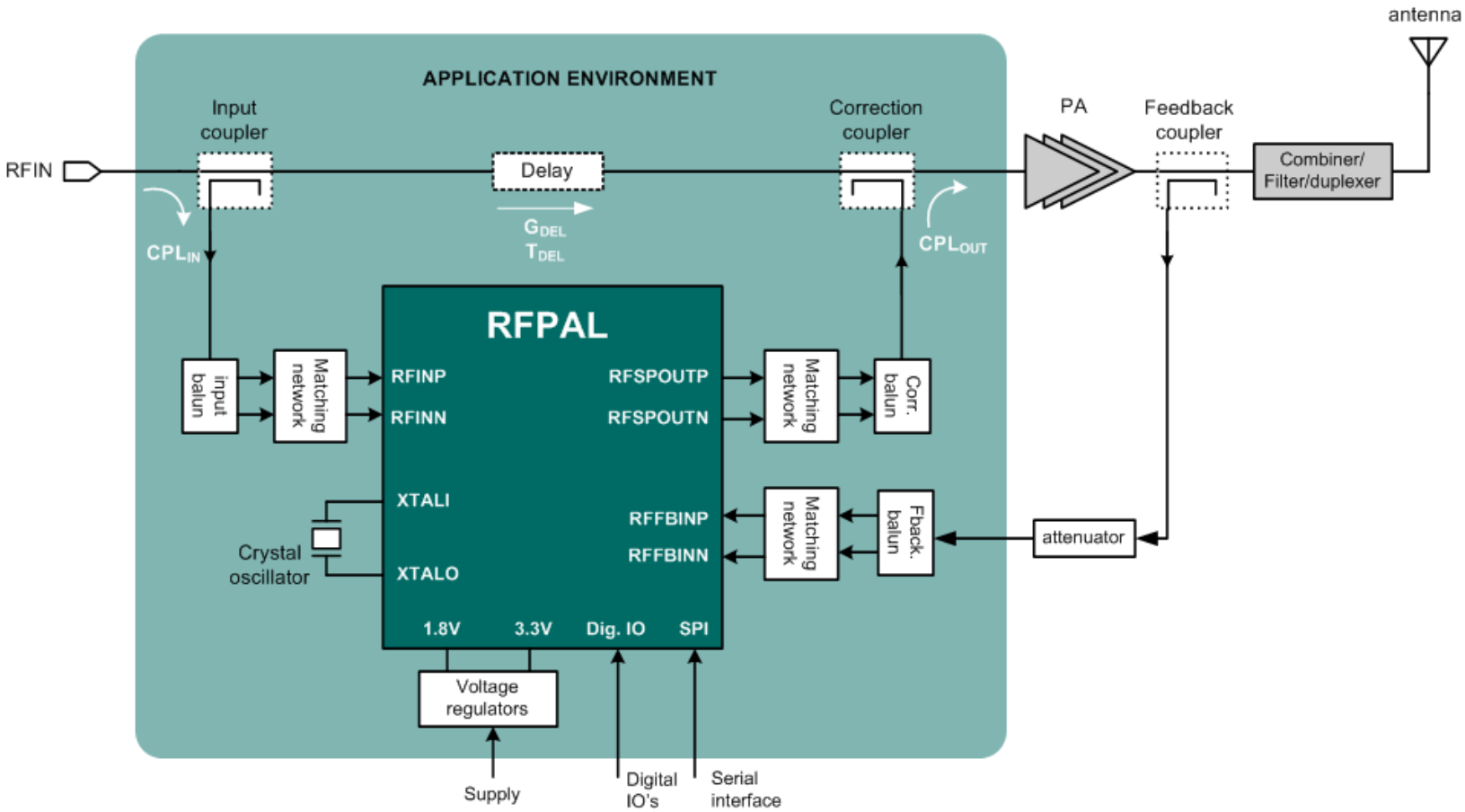

RFPAL in Microwave Backhaul Designs

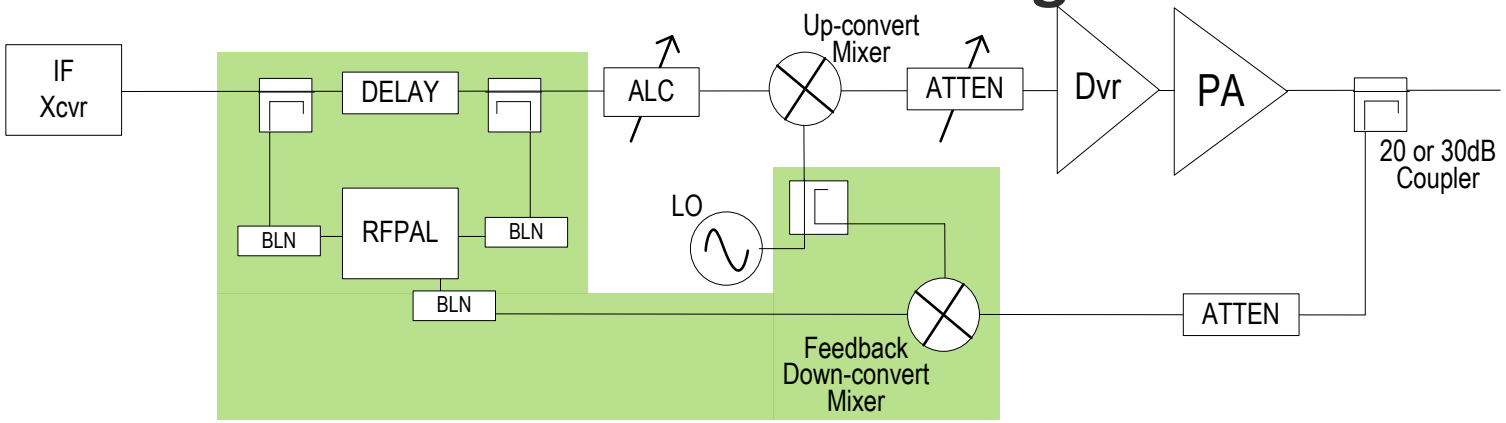

Easy to linearize split-mount or integrated backhaul systems

128QAM, 28 MHz BW

Before correction

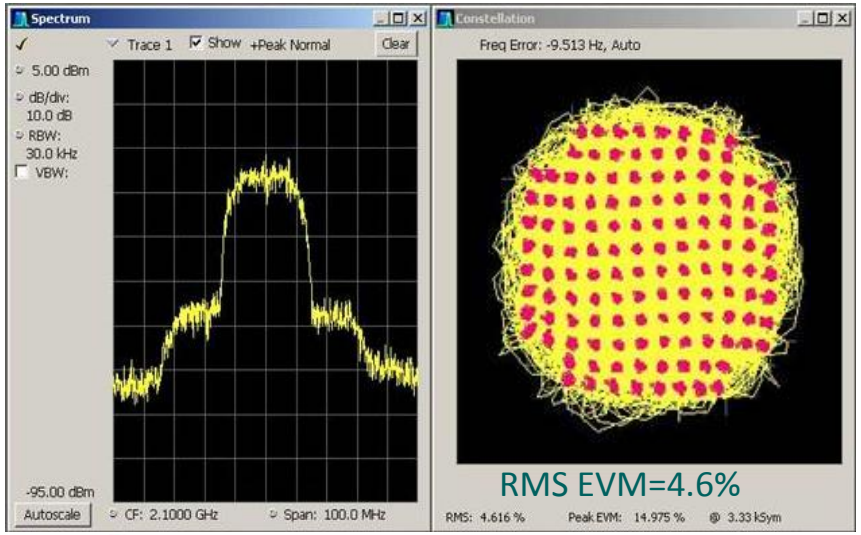

After correction

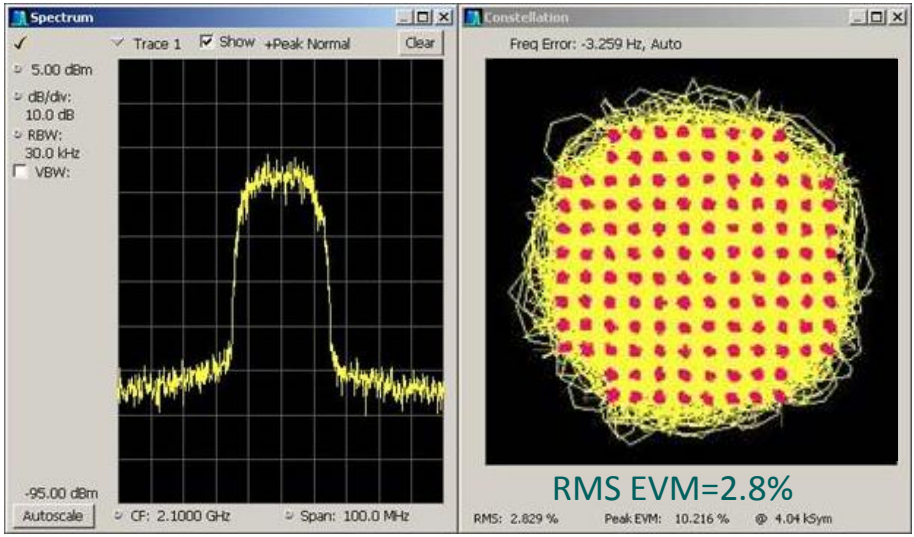

RFPAL System Architecture

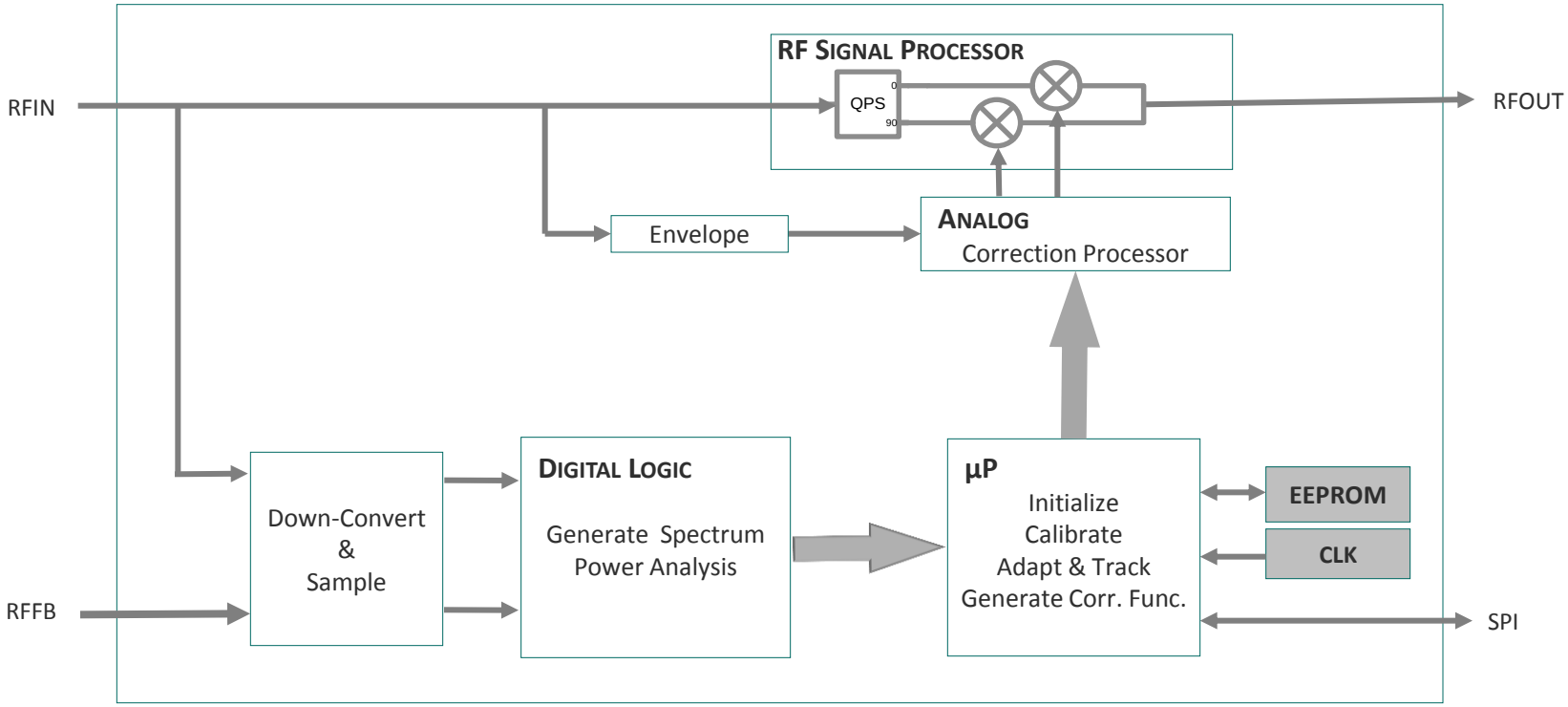

RFPAL Signal Path

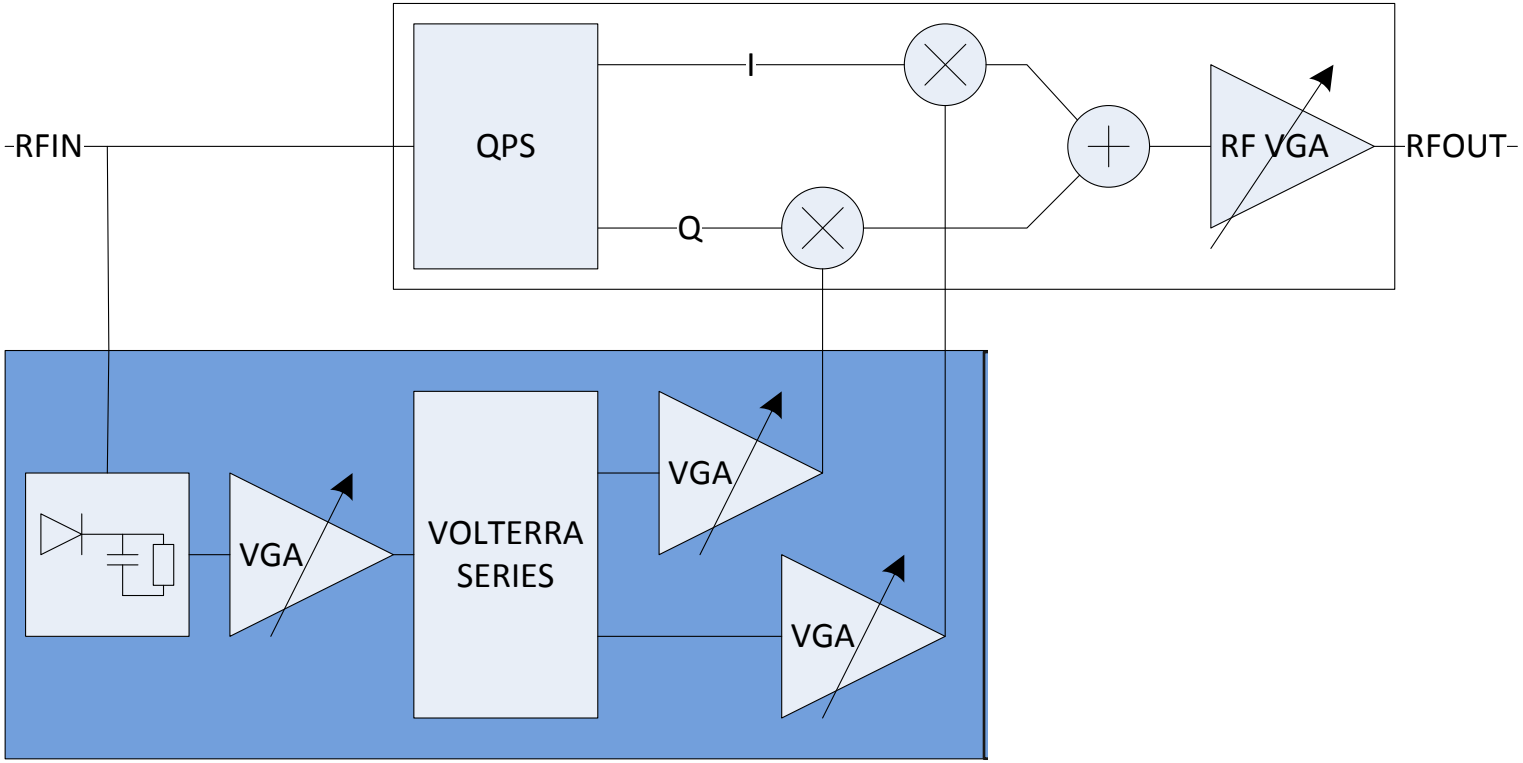

Moves application of signal processing from digital to analog domain

Analog Volterra Series

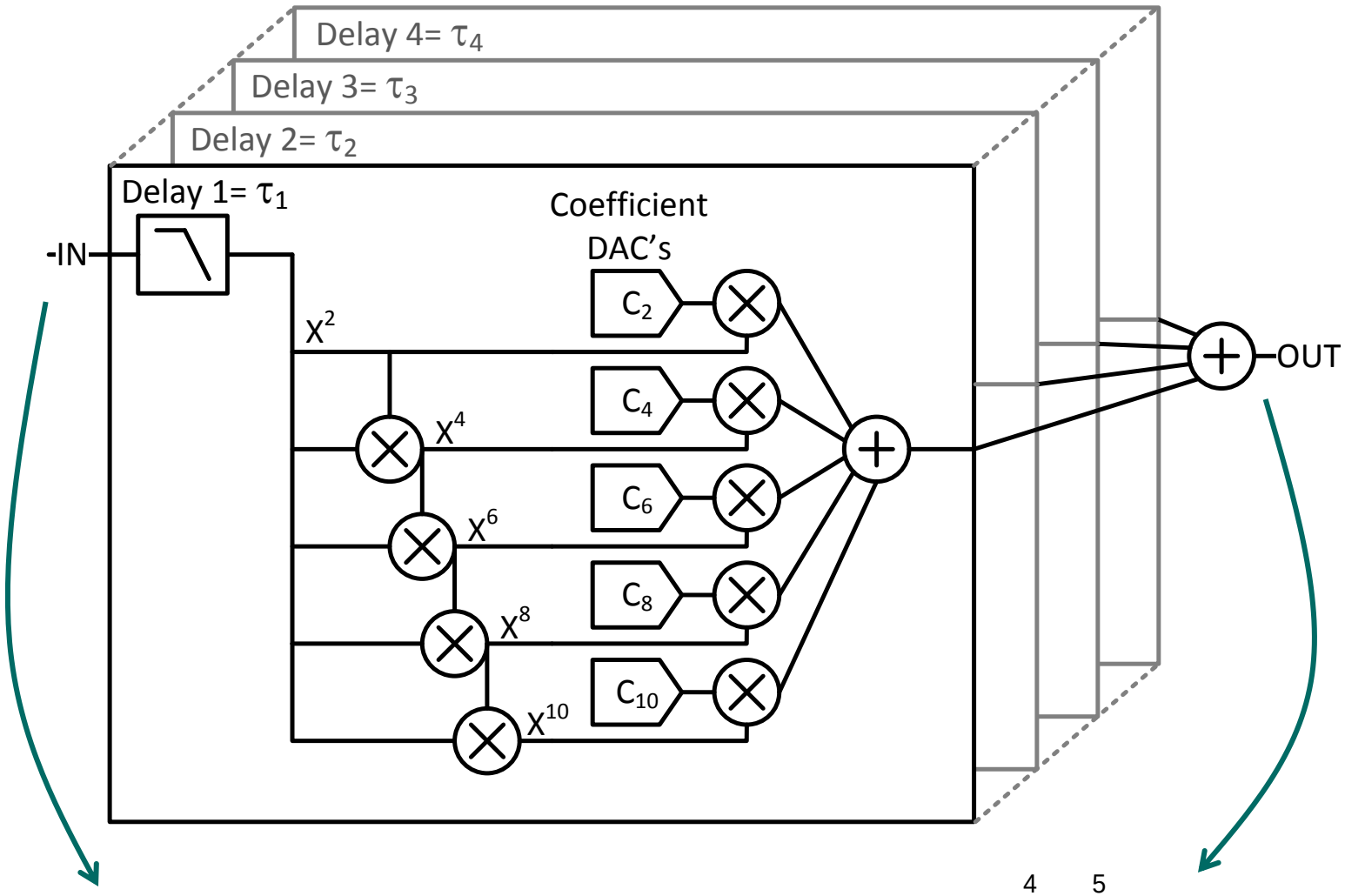

$$V_{IN}(t) = r^2(t)$$

$$V_{OUT}(t) = \sim \sum_{p=1}^{4} \sum_{m=1}^{5} c_{2.m} r^{2.m}(t - \tau_p)$$

Cost Function

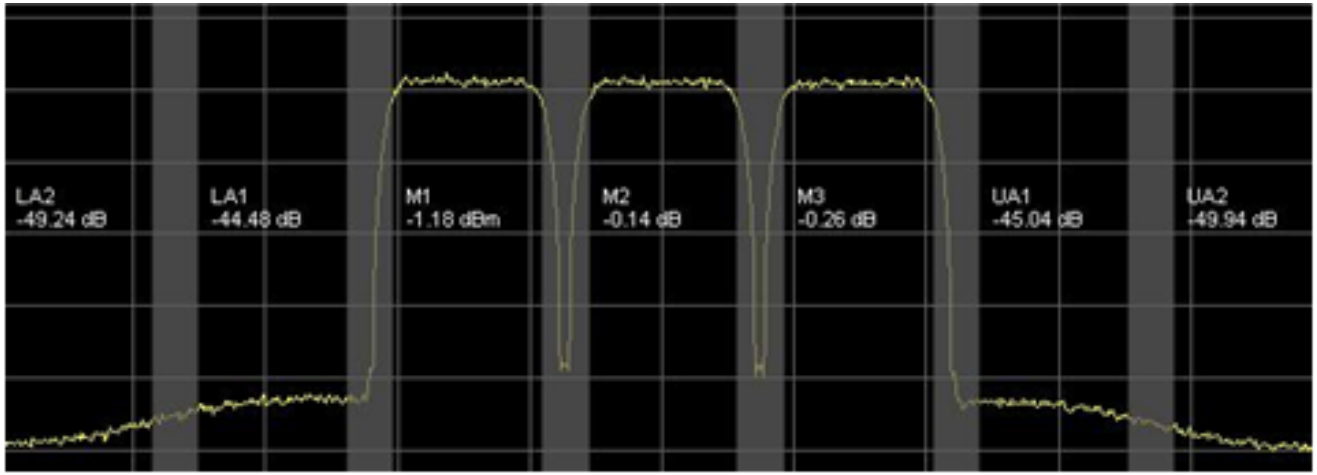

P_{2L} P_{1L} P_{1U} P_{2U}

Optimize Cost function

$$C(\mathbf{w}) = \log_2\left[f_1(P_{1L}, P_{1U}) + f_2(P_{2L}, P_{2U})\right]$$

$$\mathbf{w}_{opt} = \min_{\mathbf{w}} C(\mathbf{w})$$

Use a Stochastic gradient search algorithm to optimize

Cost Surface & Adaptation

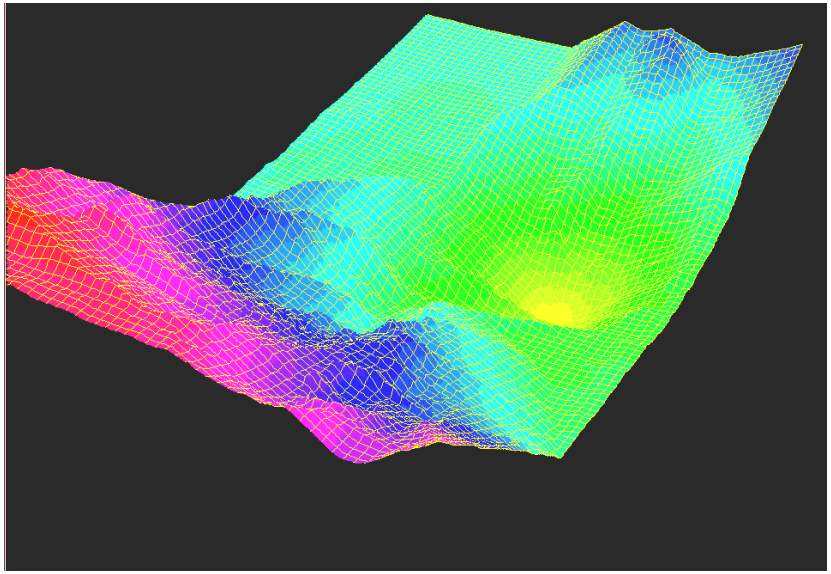

Cost Surface
(artist's rendition)

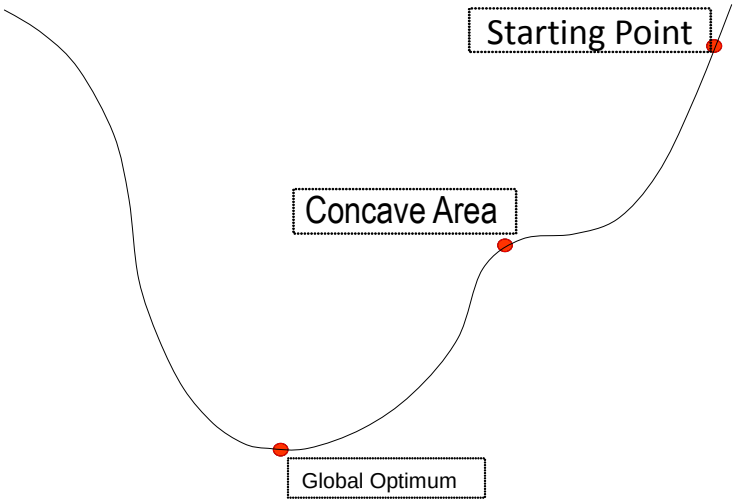

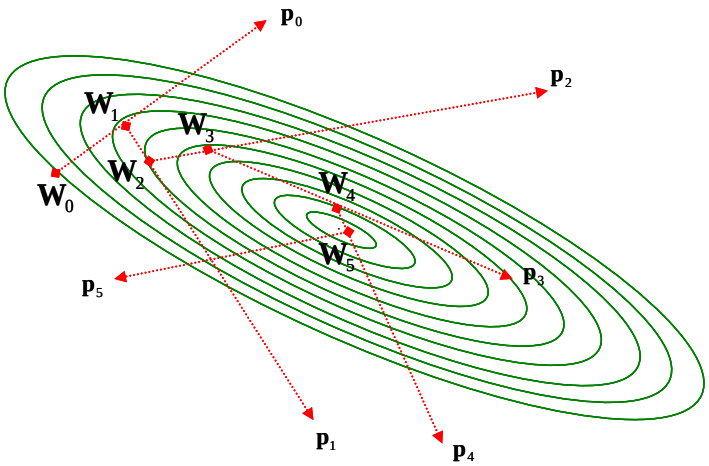

Extensible Approach

- **Basic idea**: linearize by extracting parts of the error spectrum
  - No need to down-convert the entire signal

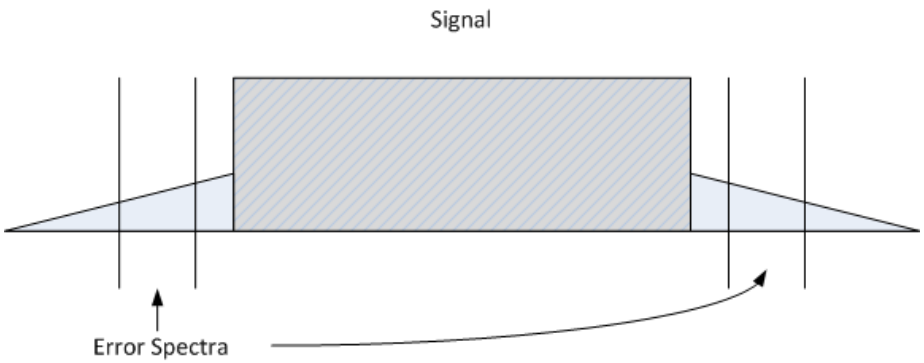

Wideband Signal

Multi-band Signals

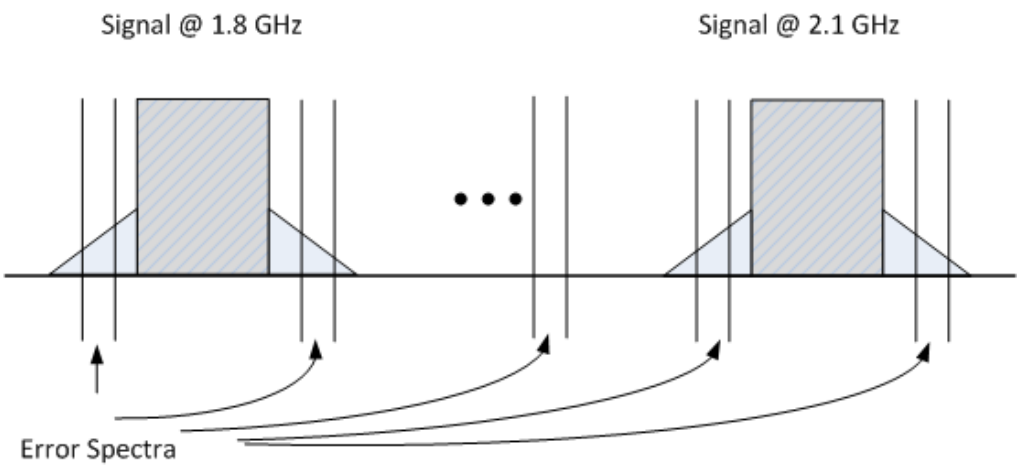

Product Line Summary

	SC1887	SC1869	SC1889	SC1894
Frequency of operation	698 – 2800MHz	698 – 2800MHz	698 – 2800MHz	168 – 4200MHz
Max. signal BW	1.2 – 40/60MHz	1.2 – 20MHz	1.2 – 60MHz	25 kHz – 60MHz
Waveforms	CDMA & WCDMA	Same as SC1889	CDMA, WCDMA, LTE, TD-LTE, WiMAX, HSDPA	Same as SC1889
PAs	Class A/AB & Doherty	Class A/AB	Class A/AB & Doherty	Class A/AB & Doherty
PA output power	Up to 50 W	Up to10W	5 W – 60W	Up to 60W
Added features (paid for add-ons)		RFFB RMS power detector	RFFB RMS power detector	RFIN & RFFB RMS power detector, gate bias control, temp. & spectral monitoring

SC2200 (MIMO) … 2H 2013

Representative Results

Macro: 30W LTE 20 MHz Using Freescale MRF8S2100 Doherty

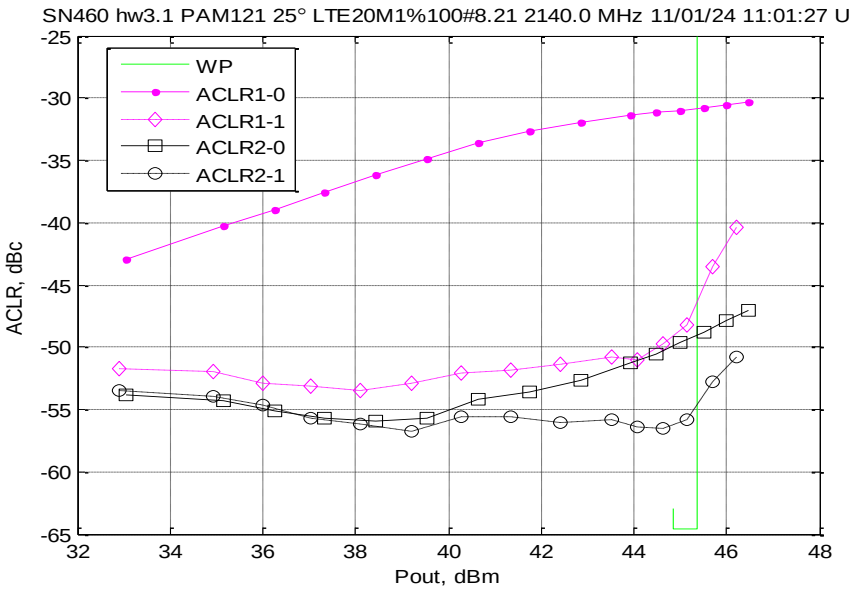

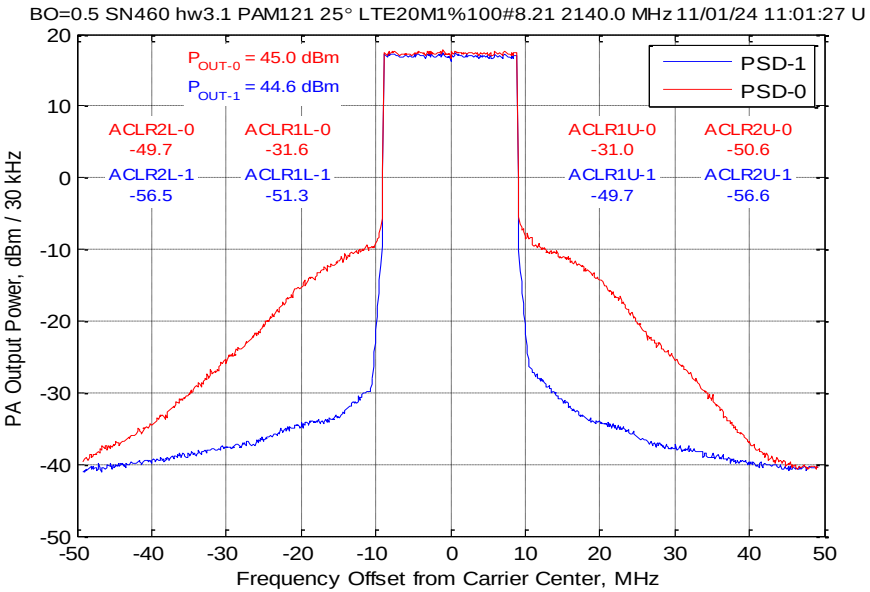

PAR = 8.2 dB, Amplifier P_{3dB} = 53.9 dBm, η_{drain}=39%

LTE with low traffic loading : E-TM2.0

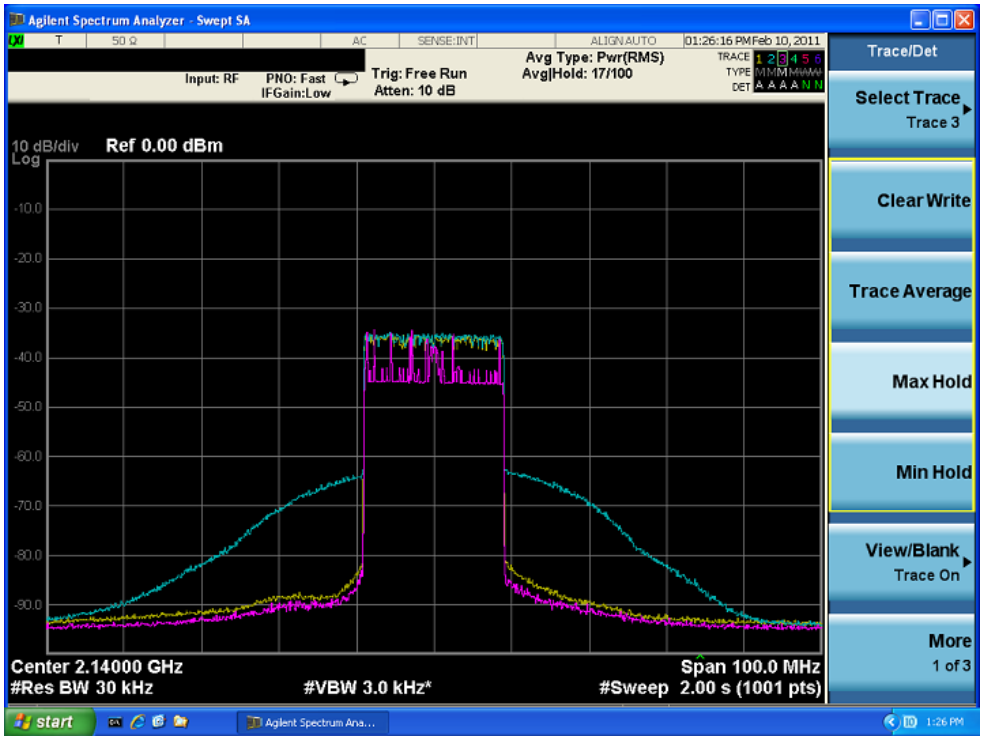

Blue – Uncorrected
Yellow – 100% Loaded
Magenta – Partial Loaded Signal Shown at Right

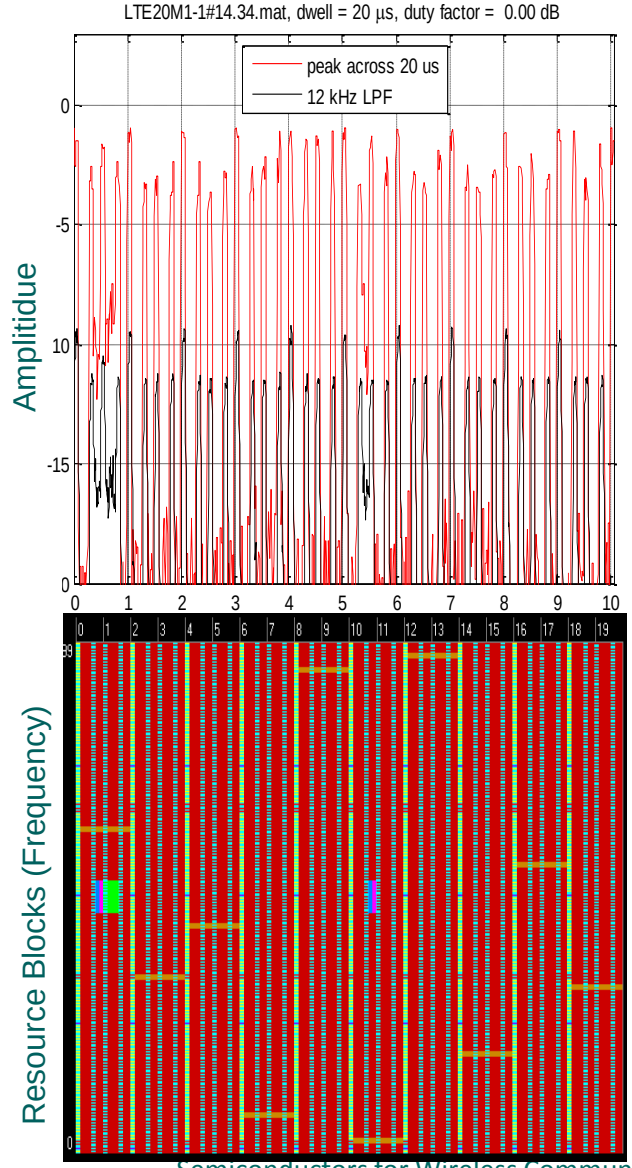

Scintera®
Semiconductors for Wireless Communications

5W (@ Antenna) Asymmetric Doherty Line-up

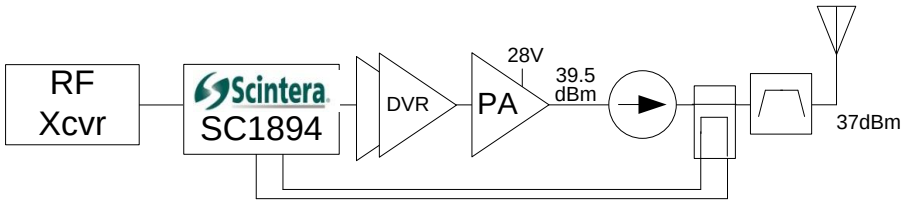

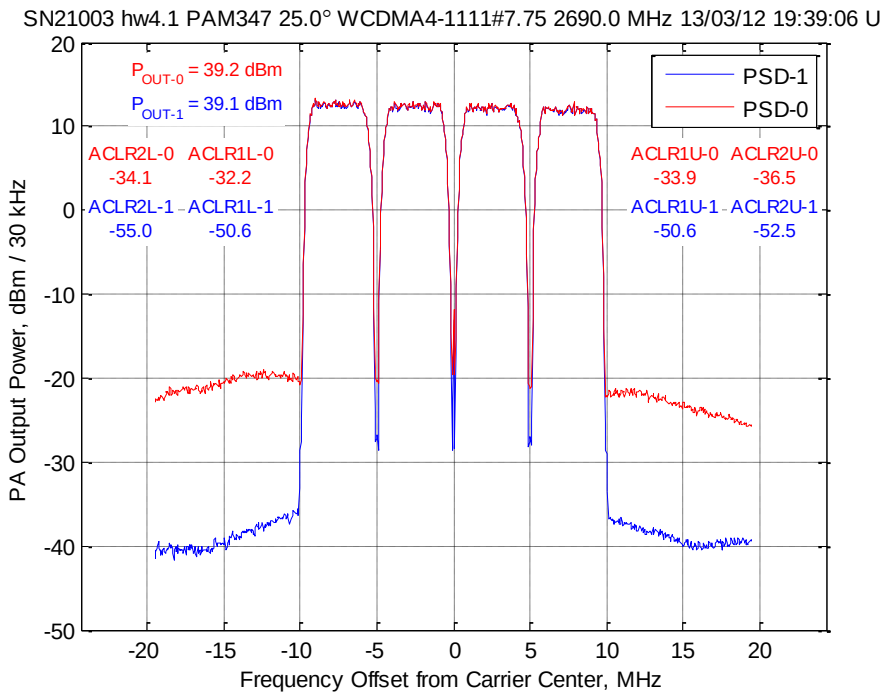

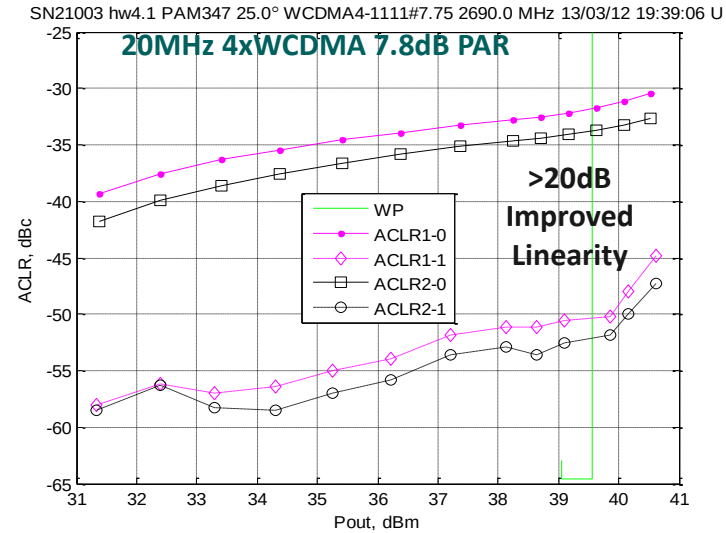

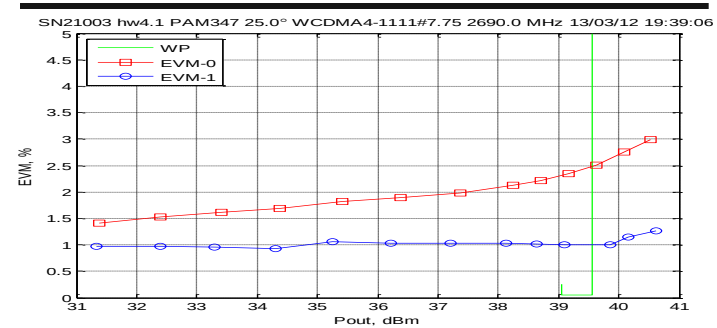

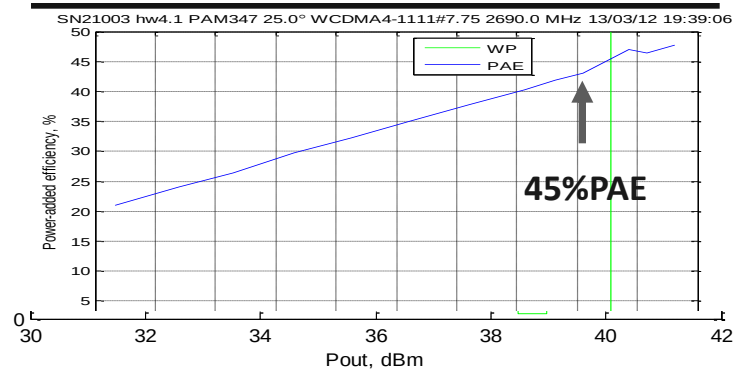

2.5W (@ Antenna) Asymmetric Doherty Line-up

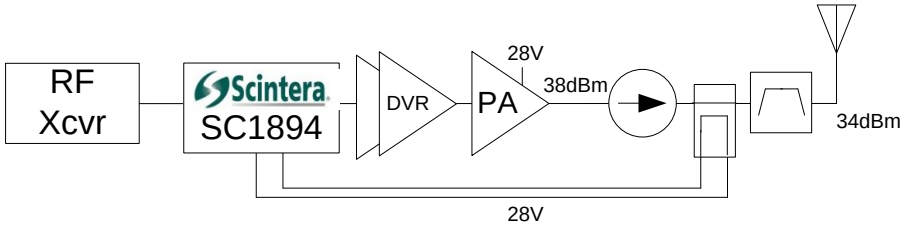

10MHz LTE 7.5 PAR

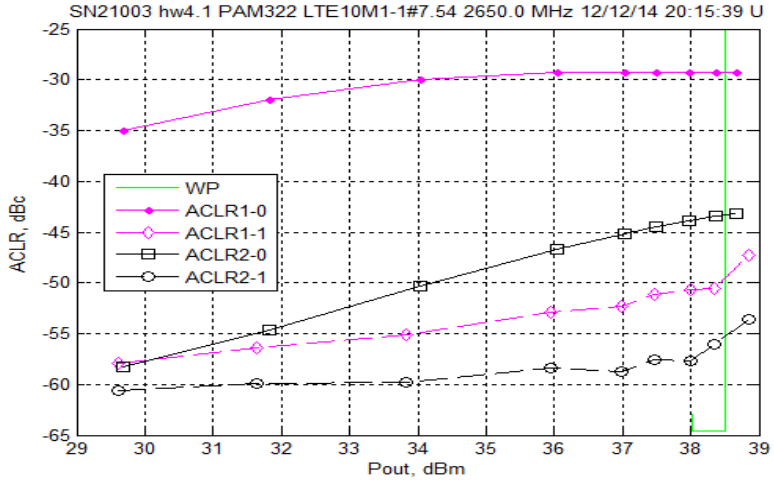

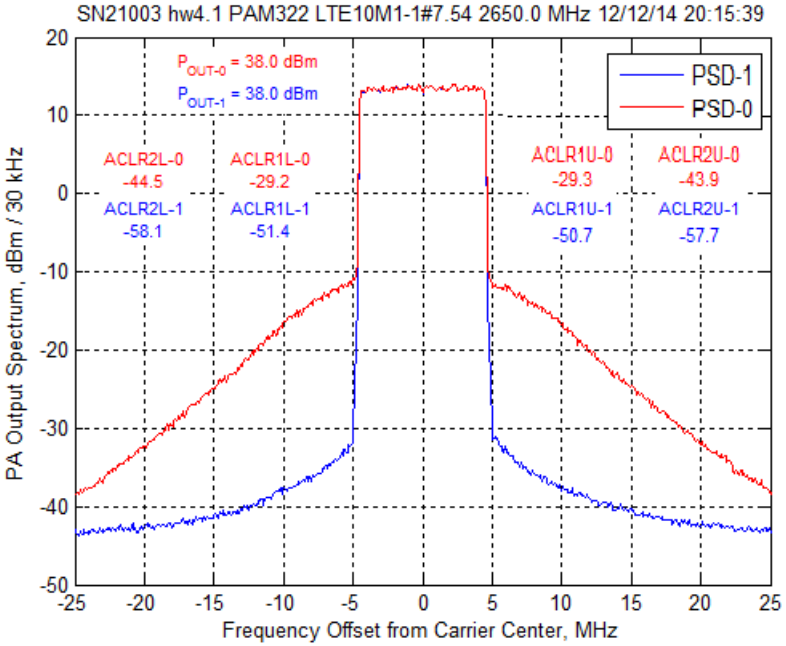

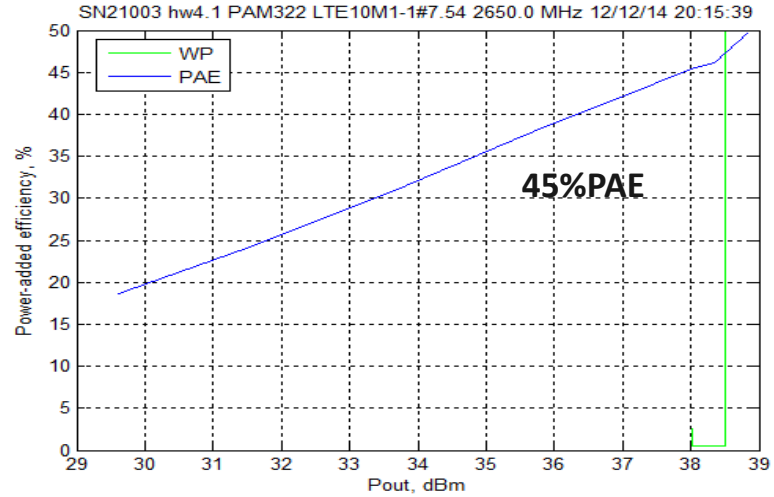

2x1W (@ Antenna) Reference Product Line-up

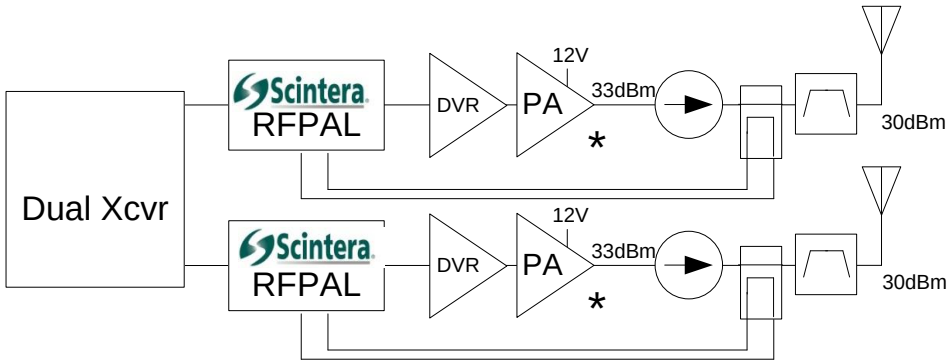

* Triquint PA requires special match for 33dBm.

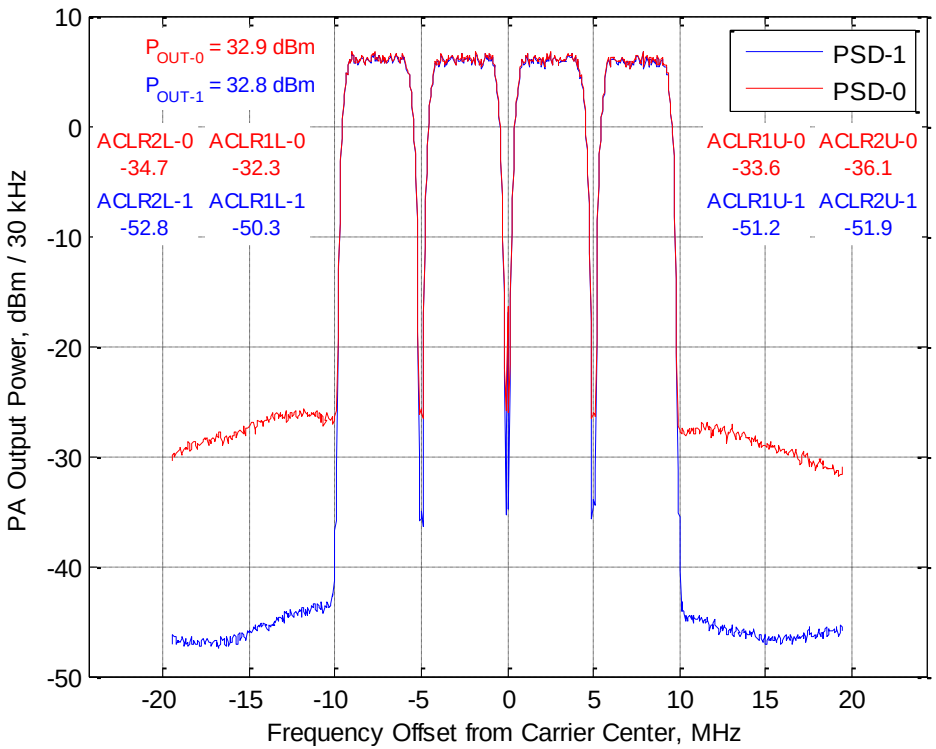

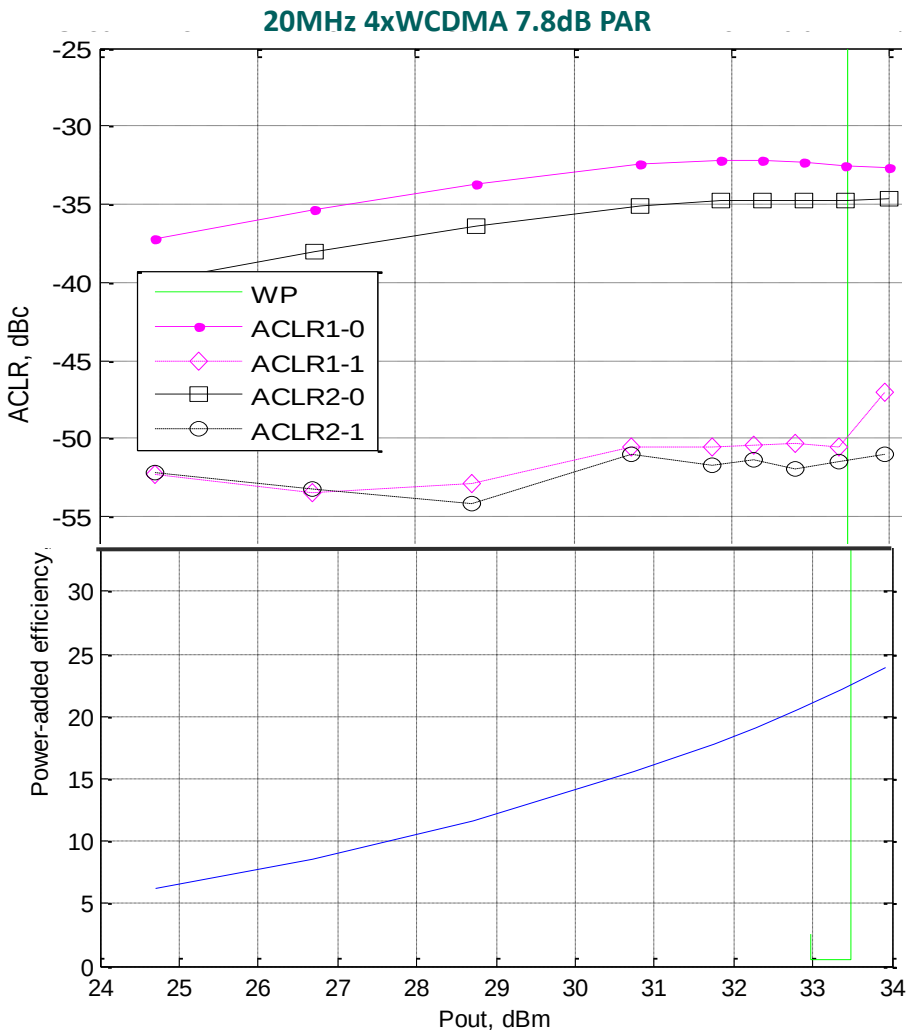

Summary

- **Technology**: Programmable analog signal processing platform is ideally suited to address a wide range of markets & applications
  - Initial focus on RF PA linearization

- **Markets**: Target markets expanding
  - Broadcast, Microwave backhaul, Public Safety, White space

- **Advantages**: Differentiated solution addressing customer issues
  - Low power consumption, low cost, small form factor and high performance
  - Rfin/Rfout, simple design and integration of RFPAL enables fast time to market
  - Supports a wide variety of
    - Waveforms & modulations (2G/3G/4G, broadcast, microwave, …)
    - Range of transmit powers (0.5W-60W)
    - Infrastructure (macro base stations, repeaters, small cells, …)
    - Technologies (LDMOS, GaN, GaAs, etc.)
    - Architectures (class A, A/B, Symmetric & Asymmetric Doherty,…)