Finisar®

Fiber Optic Solutions
for High-Speed Networks

IEEE CAS Seminar – Road To Terabit Optical Communications Systems

January 27, 2014

Thé Linh Nguyen – thelinh.nguyen@finisar.com
Finisar Corporation

© 2014 Finisar Corporation, Confidential

Abstract

- Optical transmission and interconnects have become the preferred choice for any distances from ultra long haul of >2000 km in telecom applications to short reaches of 100m in datacom applications. In a few years as bandwidth requirement increases optics will be widely used in distances of a few meters in the intra-rack down to a few centimeters in the intra-board communications. Ultimately intra-chip communications could use optics as well. This short course examines industry developments that are driving towards terabit/s optical links. These developments are driven by different economic and technical requirements depending on the applications, mainly telecom transport, datacom and high-performance computing. These requirements drive technology, architecture and design choices, standardizations and multi-source agreements.
- This course is intended ideally for ICs and systems designers outside of the optical communication field to get a comprehensive picture of the current solutions and the developing trends in the industry.
- The course is organized according to three general applications: telecom, datacom and parallel optics. It dives into some of the pertinent theories of the optical medium and optical components, end-user requirements and how they affect circuit and technology choices for each of the applications.

© 2014 Finisar Corporation Confidential

Outline

- Overview of the Optical Market
- Telecom Optics
- Datacom Optics
- Parallel Optics

© 2014 Finisar Corporation Confidential

Outline

- Overview of the Optical Market
- Telecom Optics
- Datacom Optics
- Parallel Optics

© 2014 Finisar Corporation Confidential

Bandwidth Explosion

- Driving factors – users → interconnections

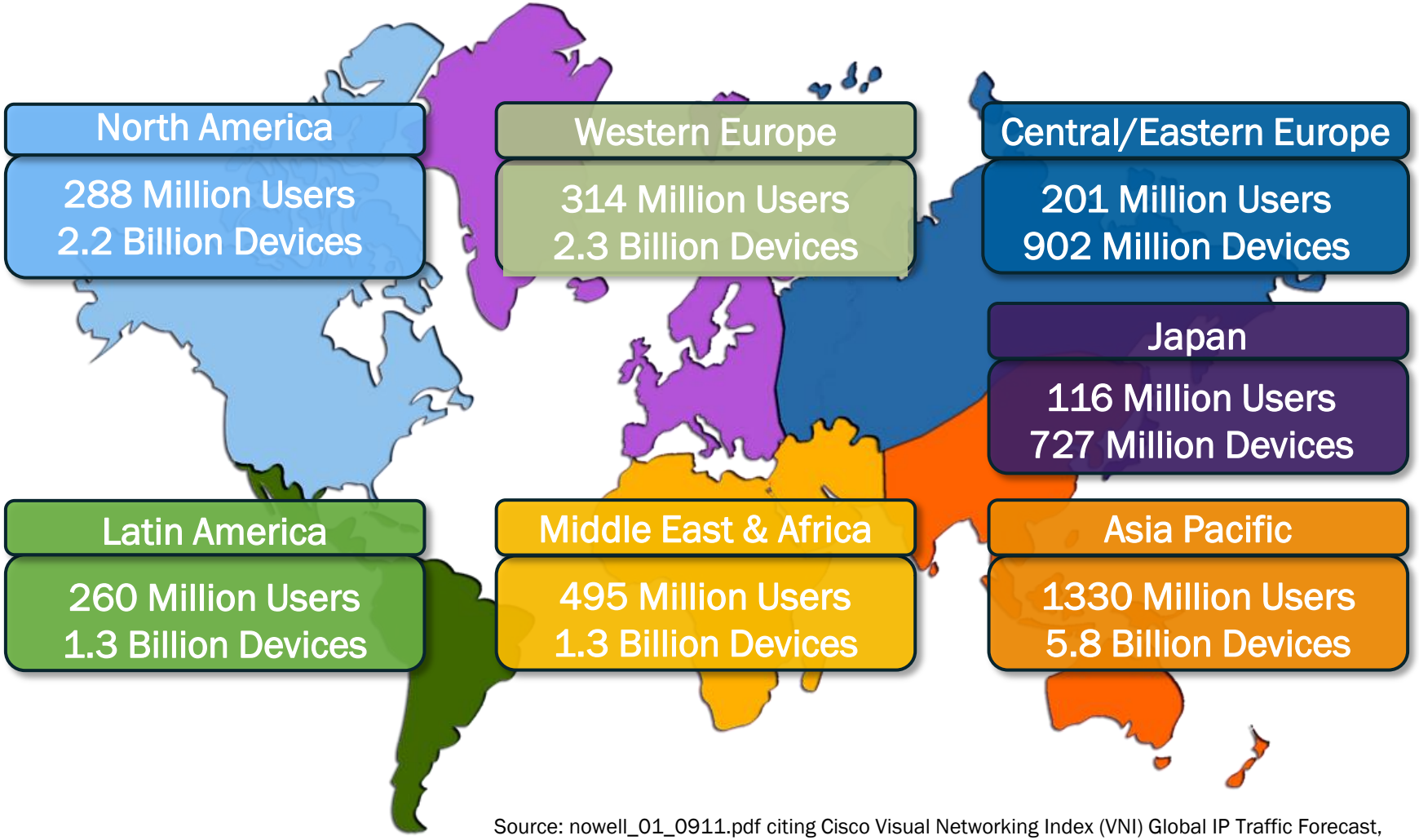

Source: nowell_01_0911.pdf citing Cisco Visual Networking Index (VNI) Global IP Traffic Forecast, 2010–2015, http://www.ieee802.org/3/ad_hoc/bwa/public/sep11/nowell_01_0911.pdf

© 2014 Finisar Corporation Confidential

Bandwidth Explosion

- Driving factors – Applications

Infrastructure / Devices

- Smart Phones
- Tablets
- Wi-Fi Deployments
- 3G / 4G / LTE
- 10G Server Deployment
- Internet Enabled TV
- The “Cloud”

Device	Traffic Multiplier
Tablet	1.1
64-bit laptop	1.9
Internet Enabled TV	2.9
Gaming Console	3.0
Internet 3D TV	3.2

Applications

- Cloud-based Businesses
- Practical Cloud Storage
- Ubiquitous Video Streaming
- Social Media Explosion
- Video Calling Commonplace
- New Database Technology
- Online Gaming

Compared against a 32 bit laptop*

*Source: http://www.ieee802.org/3/ad_hoc/bwa/BWA_Report.pdf

© 2014 Finisar Corporation Confidential

Global IP Traffic Growth 2012-2017

Global IP Traffic

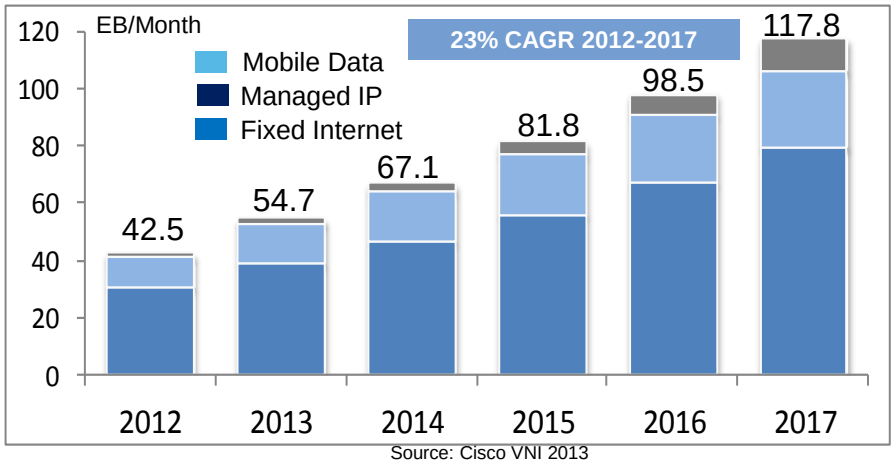

Source: Cisco VNI 2013

Global Mobile Bandwidth

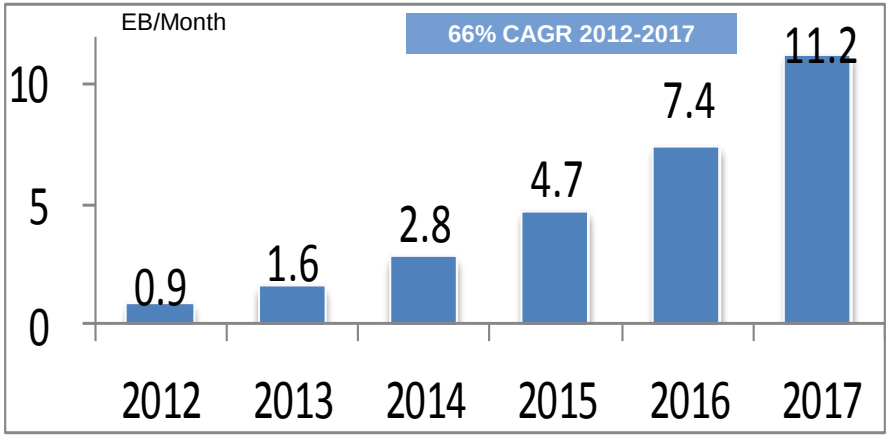

Source: Cisco VNI Mobile Forecast 2013

Internet Video Traffic

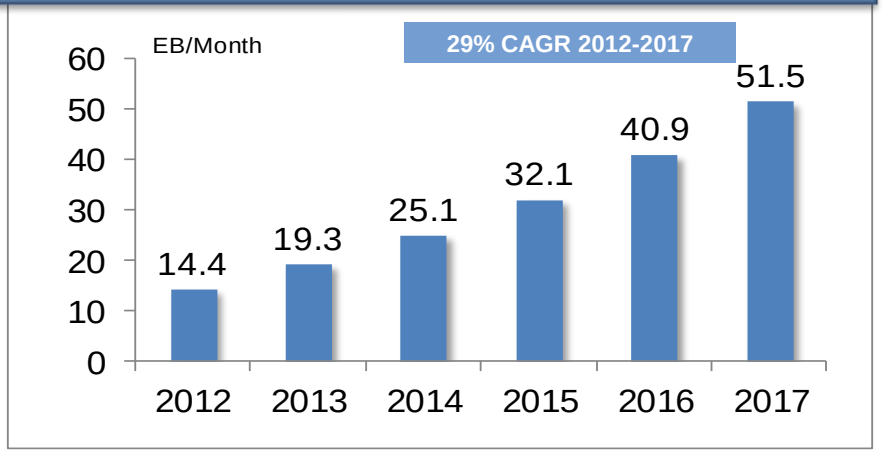

Cloud Services

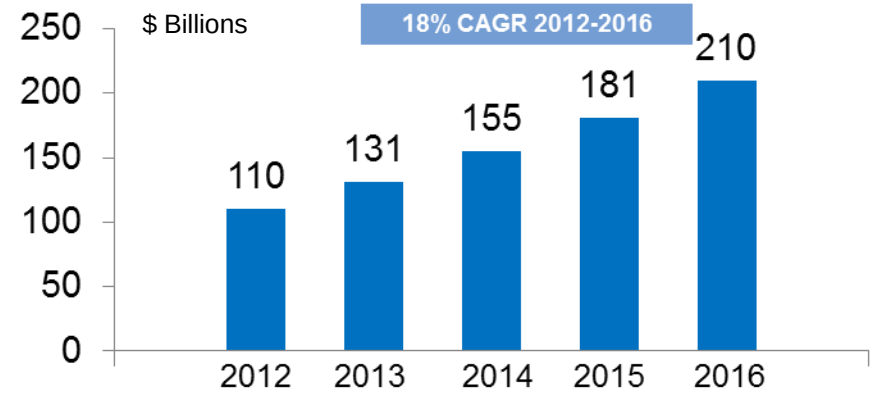

Source: Gartner 2013

© 2014 Finisar Corporation Confidential

Optics Growth

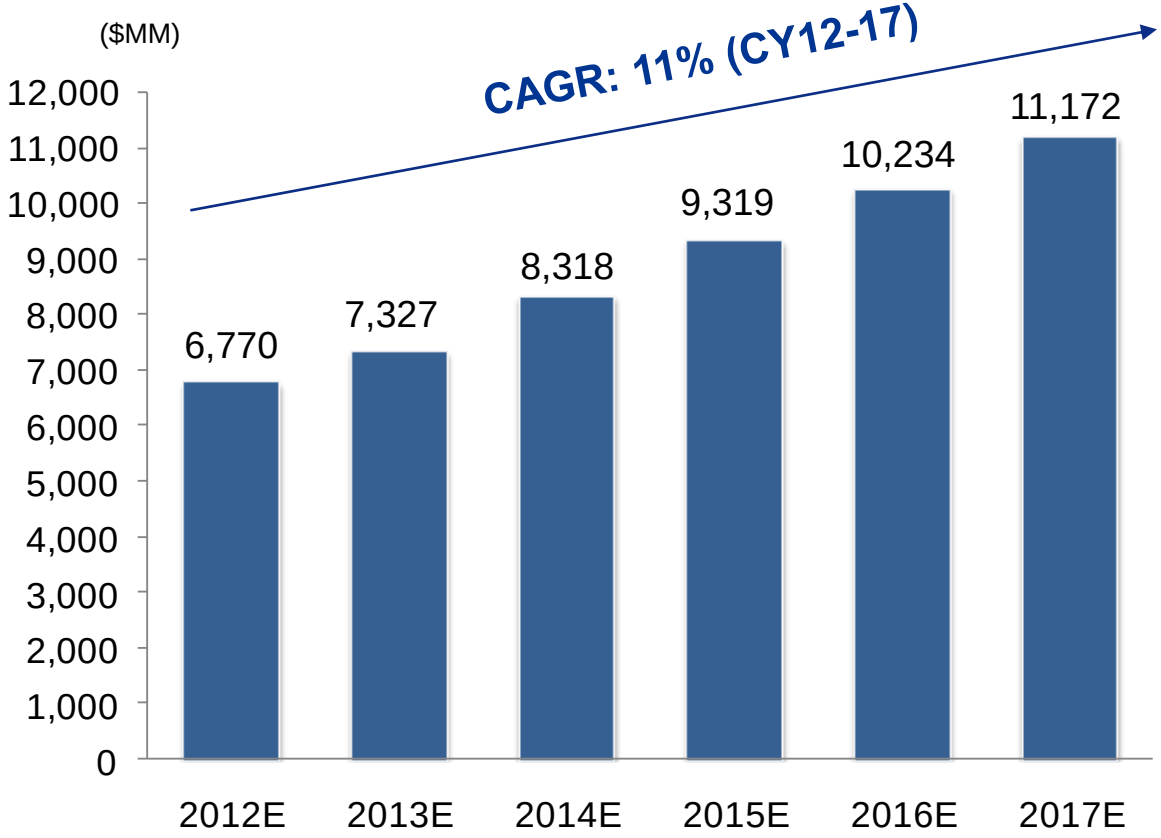

Source: Ovum Aug. 2012

© 2014 Finisar Corporation Confidential

Today's Communication Networks

- An Ethernet example

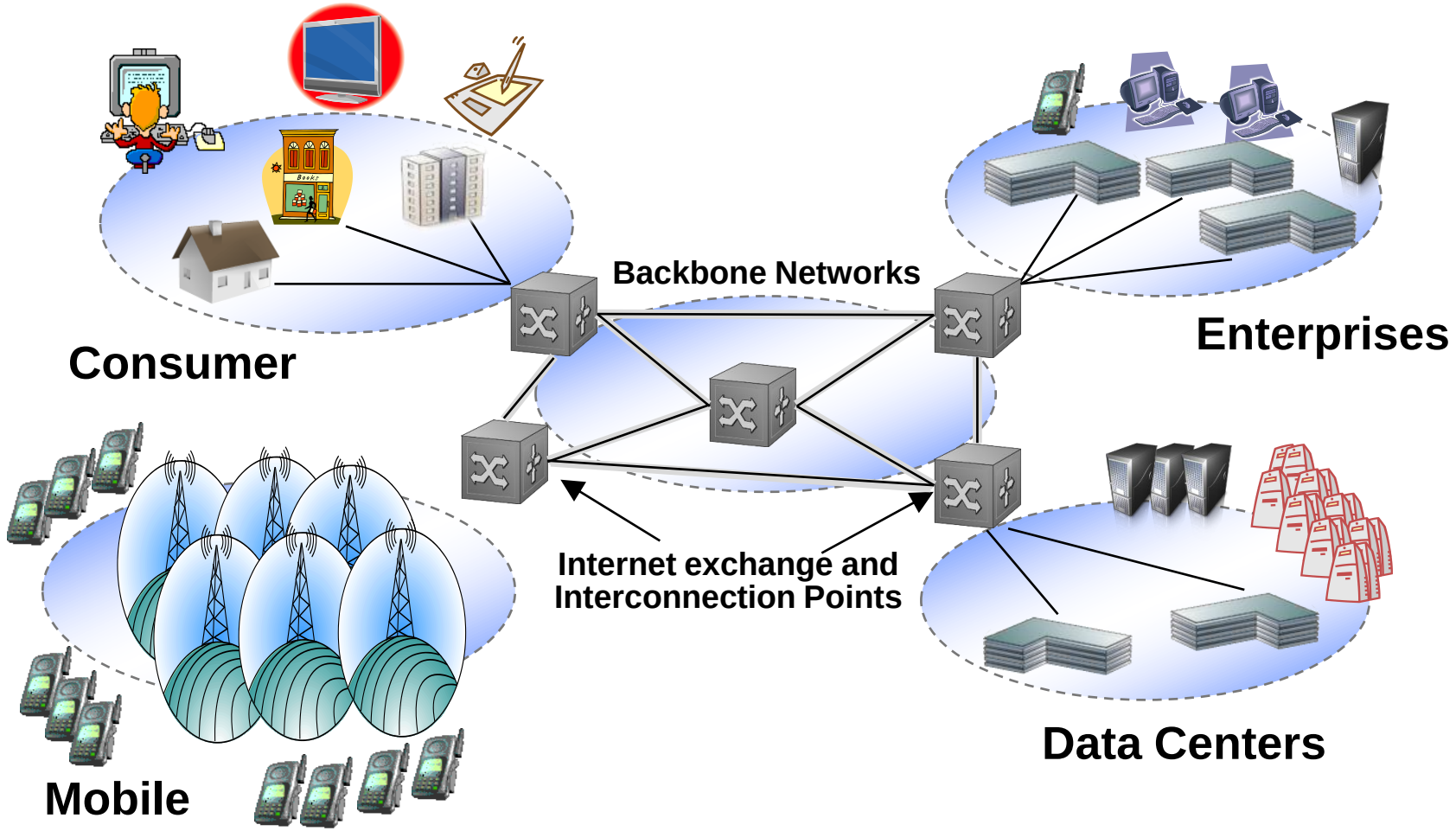

© 2014 Finisar Corporation Confidential

Optical Interconnect Products

- Telecom

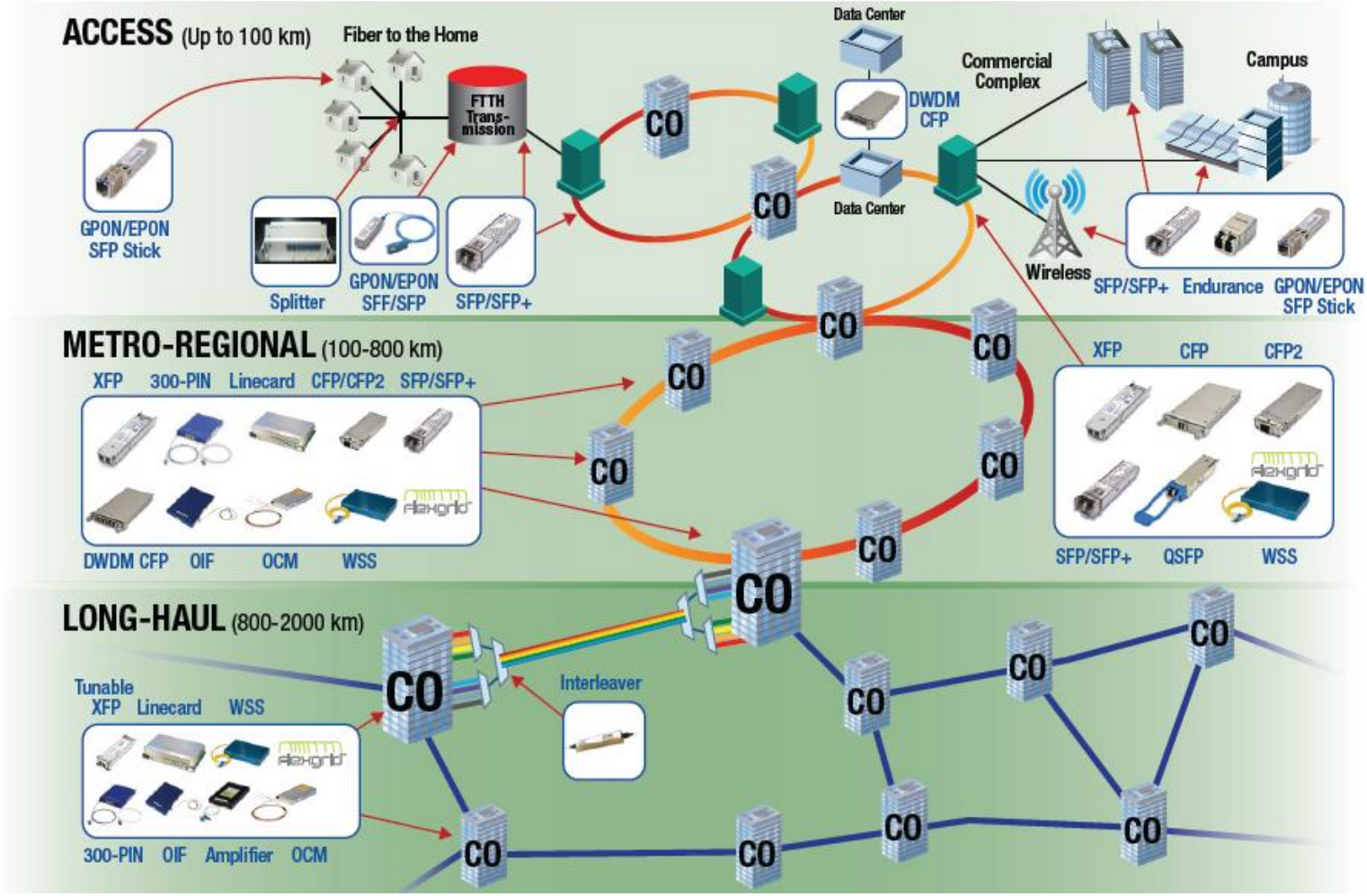

© 2014 Finisar Corporation Confidential

Optical Interconnect Products

- Datacom

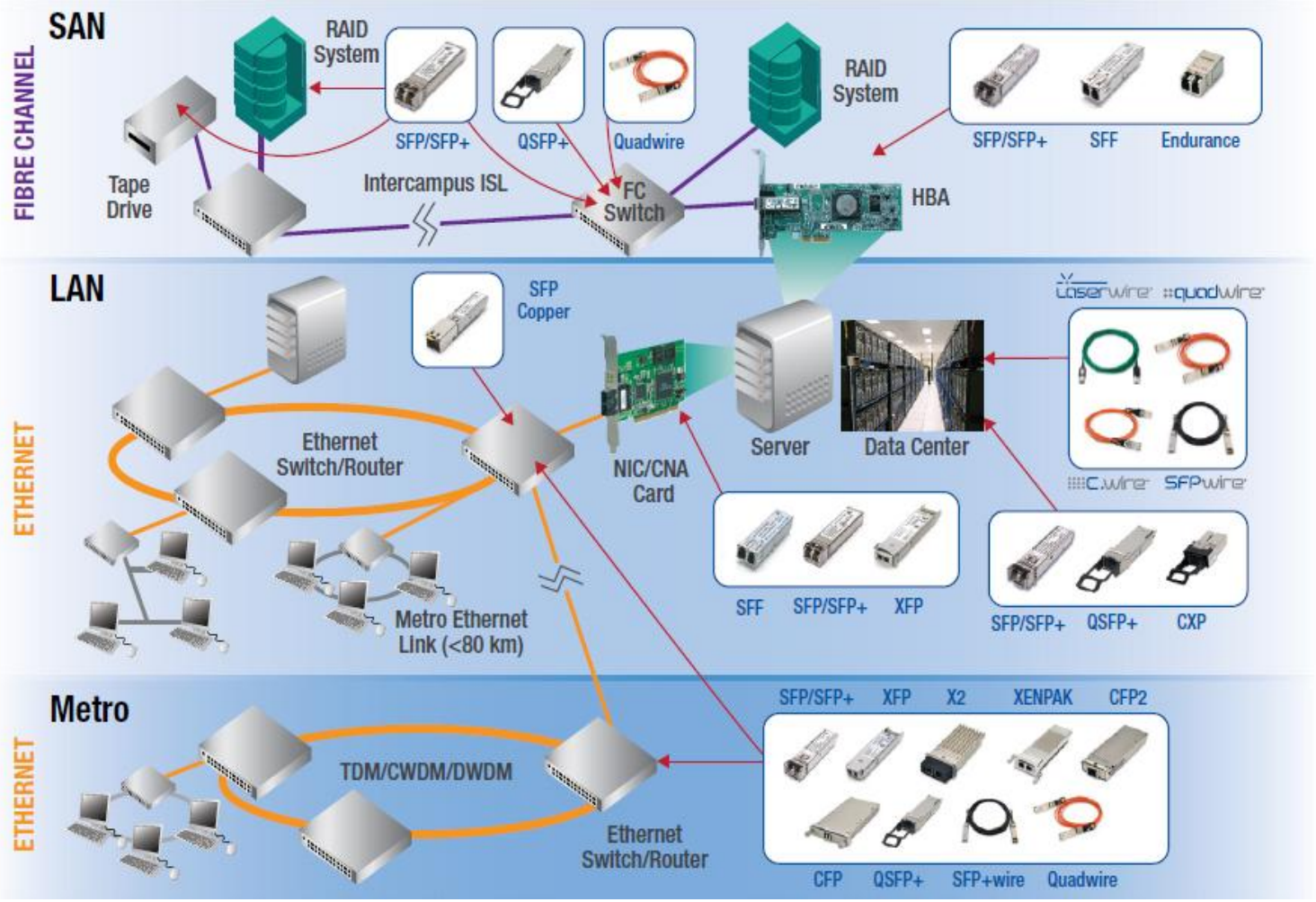

© 2014 Finisar Corporation Confidential

Anatomy of Communication Layers

- Ethernet example

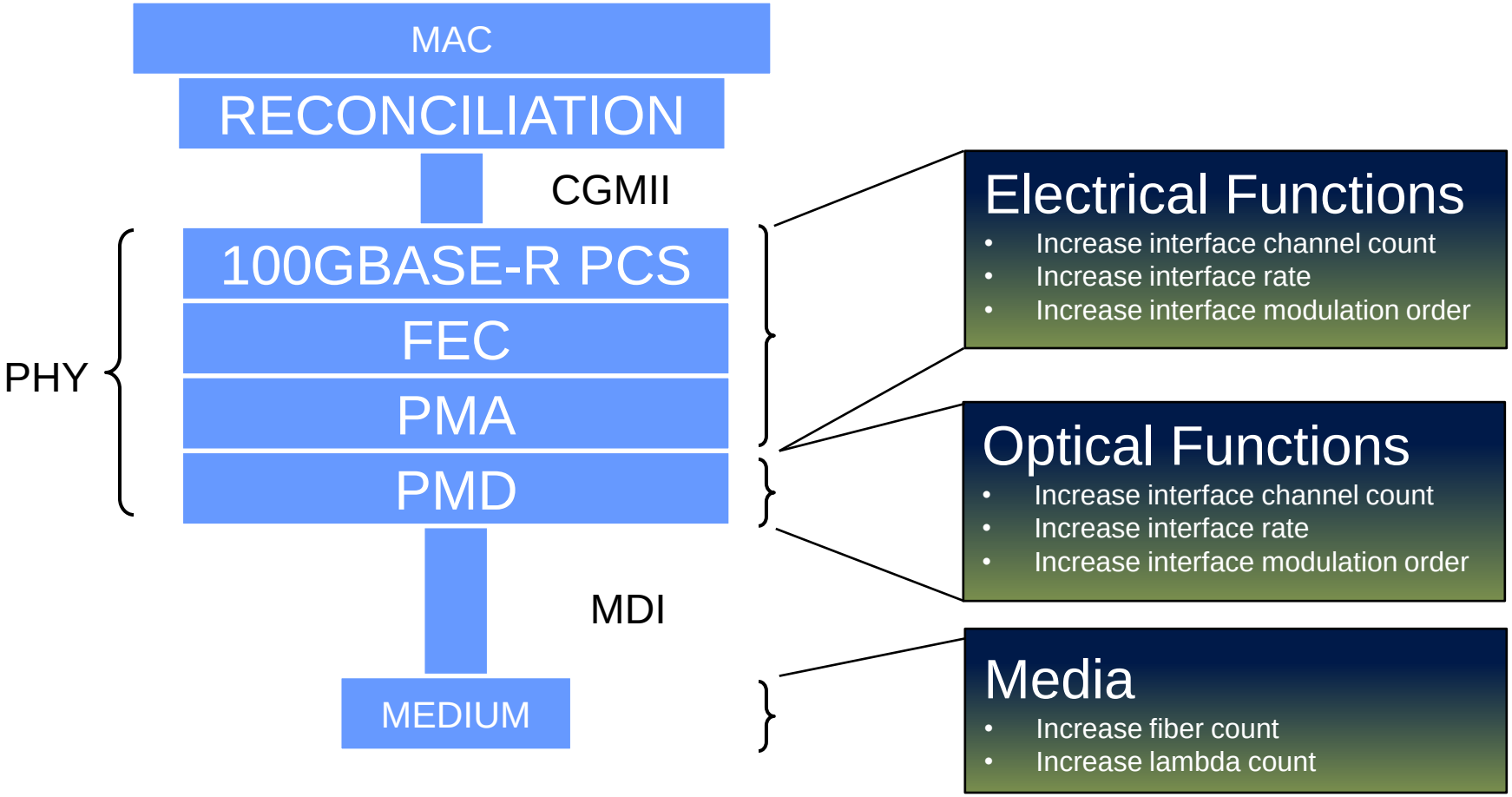

© 2014 Finisar Corporation Confidential

Anatomy of an Optical Module

- 100G CFP LR4

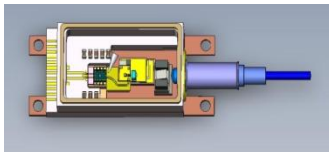

PMD

Optical Transmitter

Optical Receiver

Power and Communication Management Board

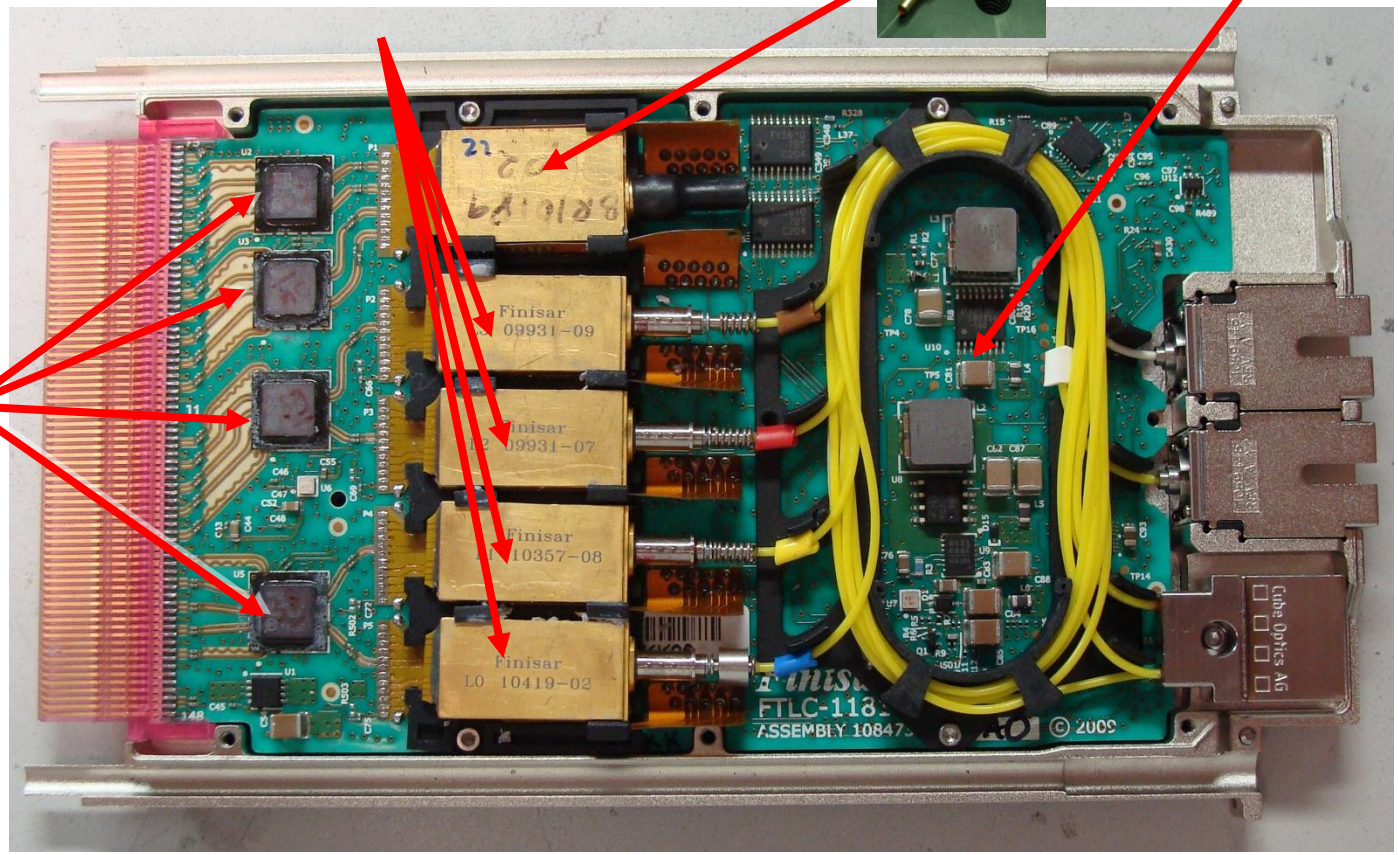

10x10G : 4x25G Gearbox IC

PMA

Courtesy of Finisar

© 2014 Finisar Corporation Confidential

Example of LAN Equipment

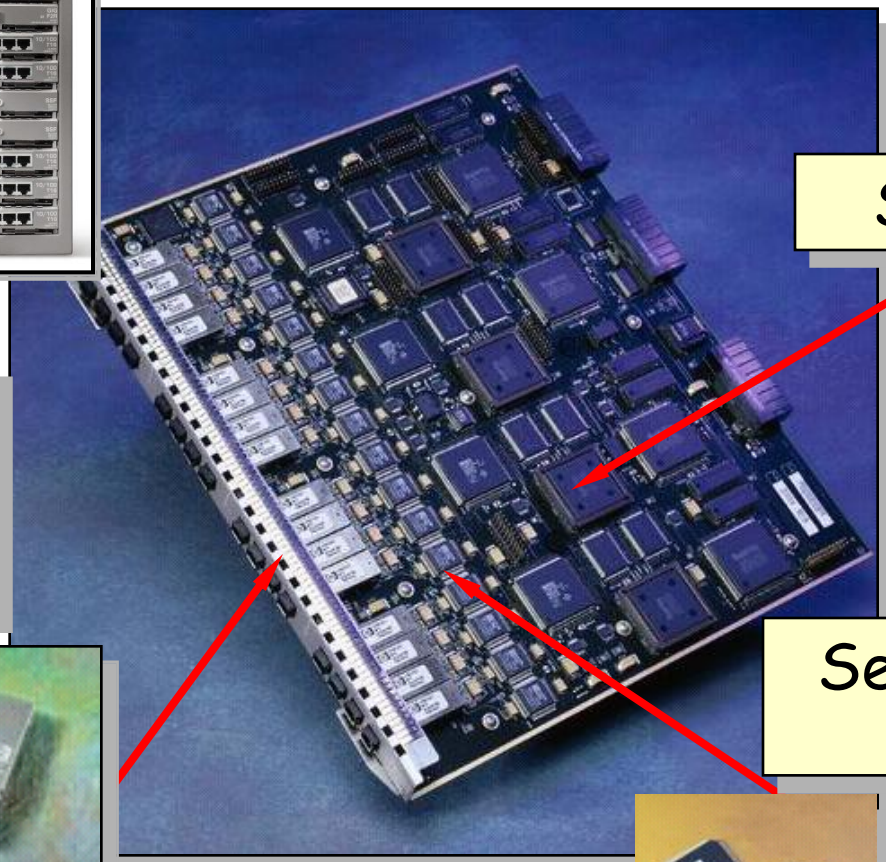

Switch ASIC

High Speed Fiber Optic Transceiver

Serial/De-serial PHY Chip

© 2014 Finisar Corporation Confidential

Why Different Optics?

- Existing optics types and reaches:
  - Submarine: 10,000km (5,000x)
  - Long Haul: 2,000km (1,000x)
  - Datacenter: 2km (1x)
- Why are existing optics types different?
  - Longer reaches require more complex/expensive optics and much more power dissipation
  - For shorter reaches this is wasted performance/cost
- Emerging optics types and reaches
  - Datacenter: 2,000m (10,000x)
  - Inter-Rack: 20m (100x)
  - Backplane: 1m (5x)
  - PCB: 0.2m (1x)
- Why will emerging optics types be different?
  - Same as above; Swiss Army knife optics are wasteful

© 2014 Finisar Corporation Confidential

Why Different Optics?

- 100G DP-DQPSK OIF Long Haul
  - 178x127x33 mm^3
  - 2000km
  - 60-80W
- 40G DPSK transponder
  - 127x100x17.5 mm^3
  - 80km
  - 15W
- 100G LR4 CFP4
  - 21.5x92x9.5 mm^3
  - 10km
  - 3.5-4W
- Board-mounted shortwave optics
  - 25x25x12 mm^3
  - 24x25Gb/s un-retimed for 10-30m
  - 3W

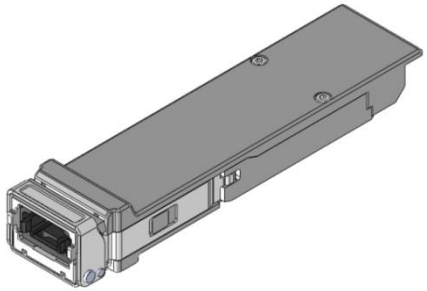

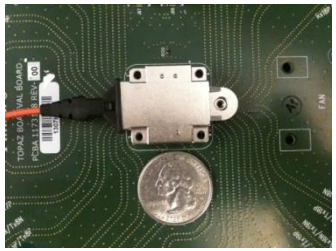

© 2014 Finisar Corporation Confidential

Outline

- Overview of the Optical Market
- Telecom Optics
- Datacom Optics
- Parallel Optics

© 2014 Finisar Corporation Confidential

Telecom Optics

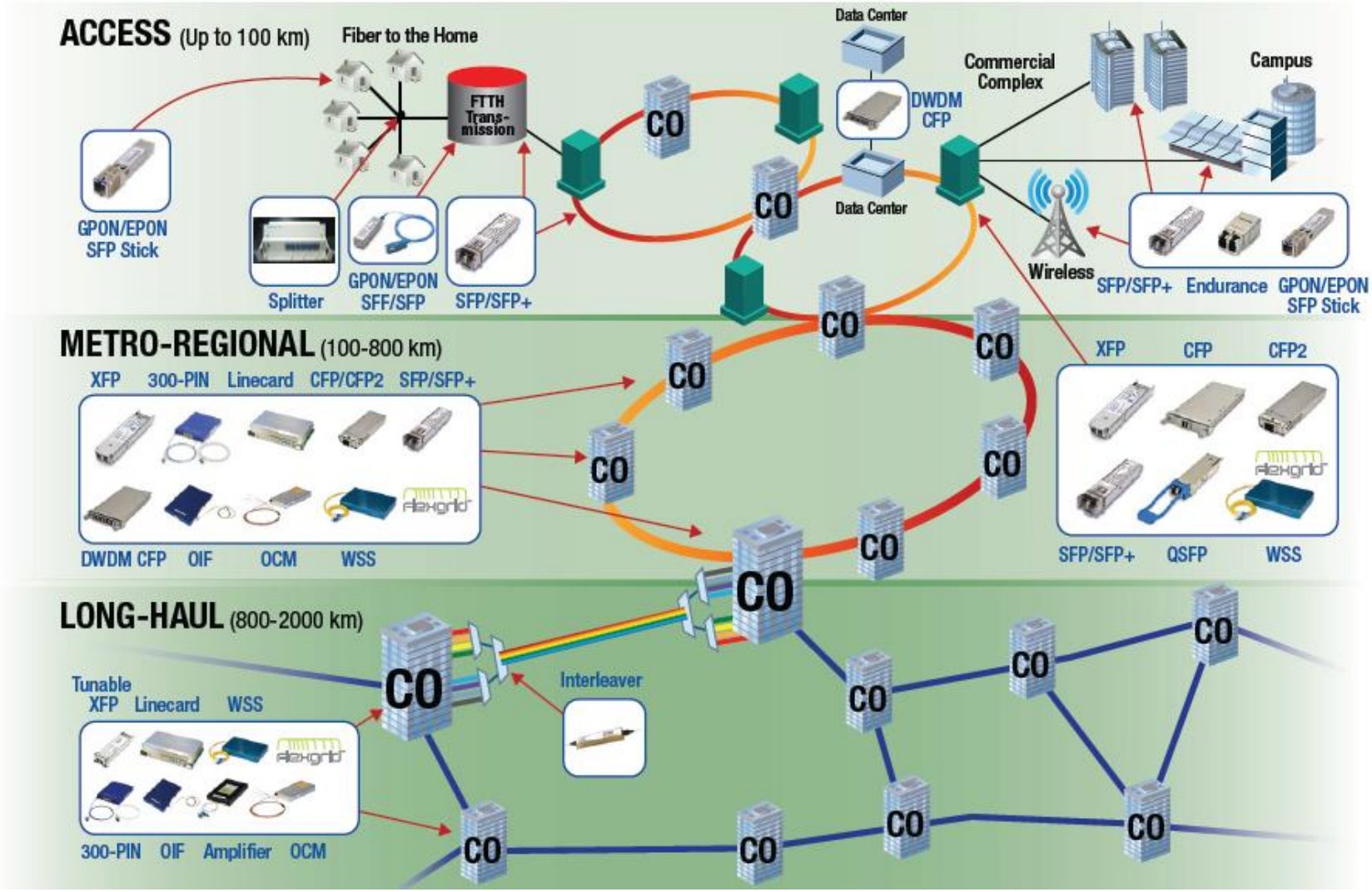

© 2014 Finisar Corporation Confidential

Telecom Optics

- Economic drivers:
  - Reach → single-mode fiber (SMF) with EDFA and dispersion compensation (fiber and/or electronics)
  - High line rate per wavelength → Evolve from NRZ to higher-order-mode to maximize spectral efficiency → maximize usage of installed fiber and amplifiers
  - Multiple wavelengths → DWDM

© 2014 Finisar Corporation Confidential

Technology Evolution

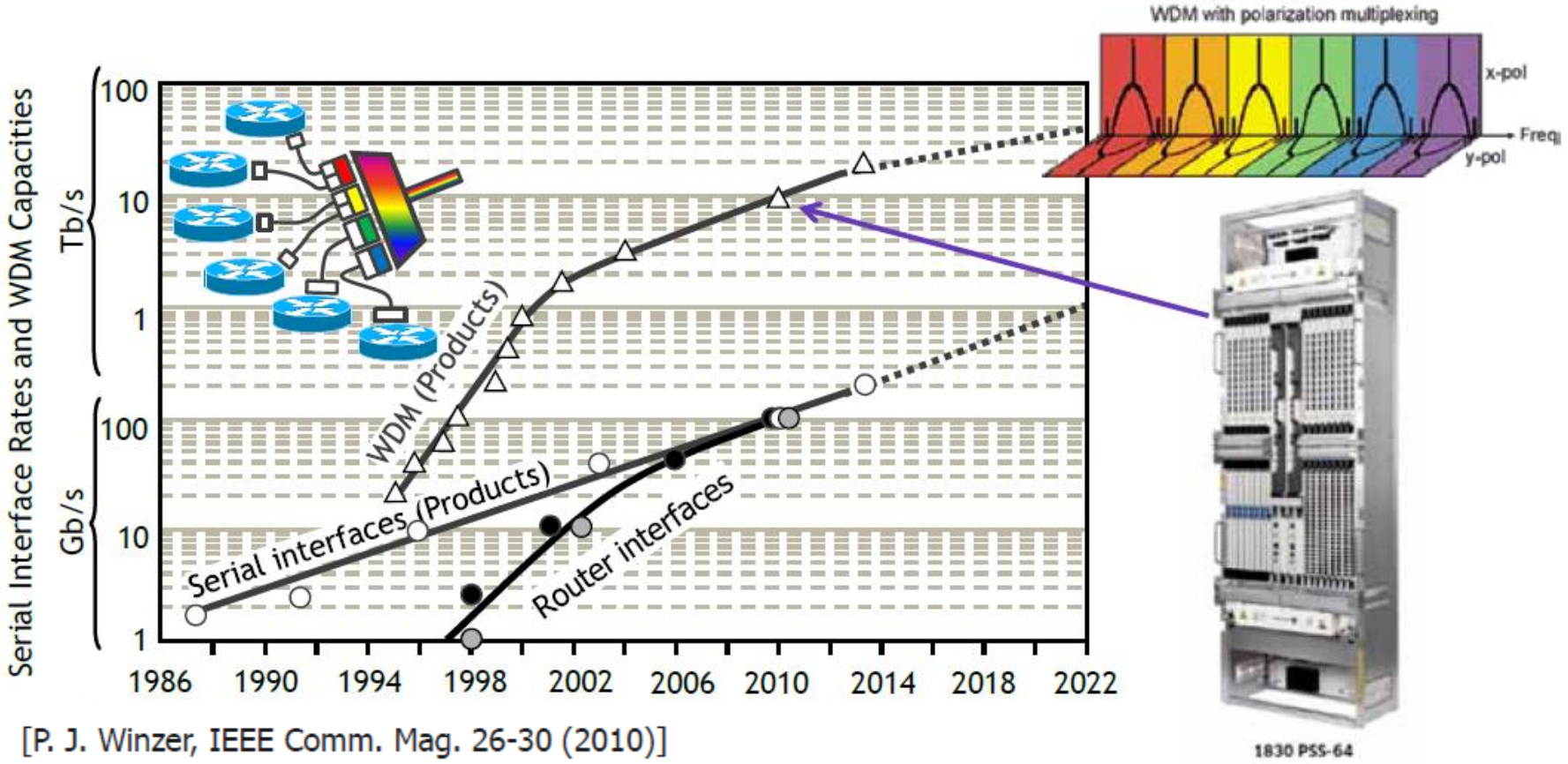

[P. J. Winzer, IEEE Comm. Mag. 26-30 (2010)]

- Latest record of 31Tb/s over a single fiber – 155 channels at 200Gb/s/channel at 50GHz spacing by Alcatel-Lucent

© 2014 Finisar Corporation Confidential

Early Telecom Optics

- Line rate was low
- More loss-limited than dispersion-limited → C- and L-band were used
- Direct NRZ modulation of laser – cheapest solution

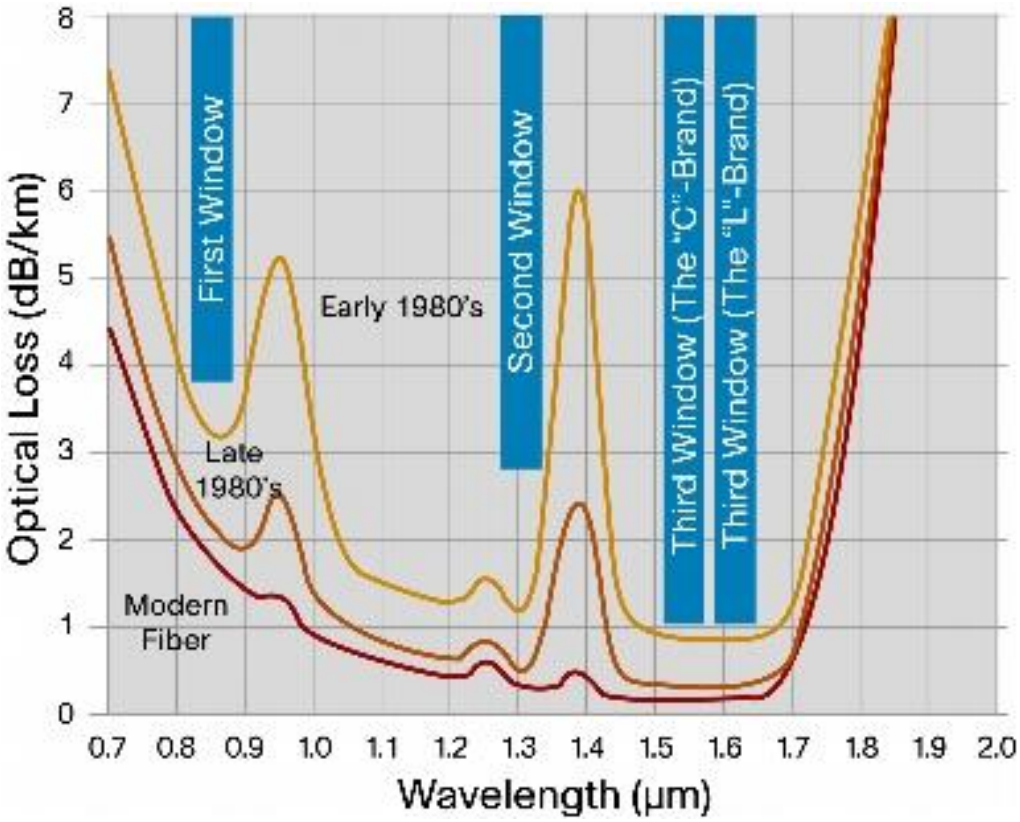

© 2014 Finisar Corporation Confidential

Issue with DML – Chirp

- DML – Directly Modulated Laser
- Chirp is frequency change of an optical pulse with time
  - Adiabatic – power-dependent frequency of oscillation
  - Transient – edge-rate-dependent frequency of oscillation

© 2014 Finisar Corporation Confidential

Chirp and Chromatic Dispersion

$$E_L(t) = \sqrt{P_L(t)}\exp[j\phi_L(t)]$$ ← Optical field

$$\Delta\nu(t) = \frac{\alpha}{4\pi}\left(\frac{d}{dt}[\ln(P_L(t)) + \kappa P_L(t)]\right)$$ ← Frequency deviation of optical carrier

$$\phi_L(t) = 2\pi\int_0^t \Delta\nu(t)dt$$ ← Phase deviation

$$h(t) = \sqrt{j\frac{c}{zD\lambda^2}}\exp\left(-j\frac{\pi c}{zD\lambda^2}t^2\right)$$ ← Fiber impulse response

$$P_O(t) = \left|E_L(t) * h(t)\right|^2$$ ← Optical power after direct detection by photodiode

- Equation of the FP laser which has positive chirp (increase in frequency at rising edge and higher optical power level)
- Direct detection is a square function
- Power is converted to current by photodiode
- Phase information of optical field is lost

Contributed paper

OPTO-ELECTRONICS REVIEW 14(2), 123–128

Characterization of semiconductor laser frequency chirp based on signal distortion in dispersive optical fiber

P. KREHLIK*

Institute of Electronics, AGH University of Science and Technology, 30 Mickiewicza Ave., 30-059 Cracow, Poland

Opto-Electron. Rev., **14**, no. 2, 2006

© 2014 Finisar Corporation Confidential

Chirp and Chromatic Dispersion

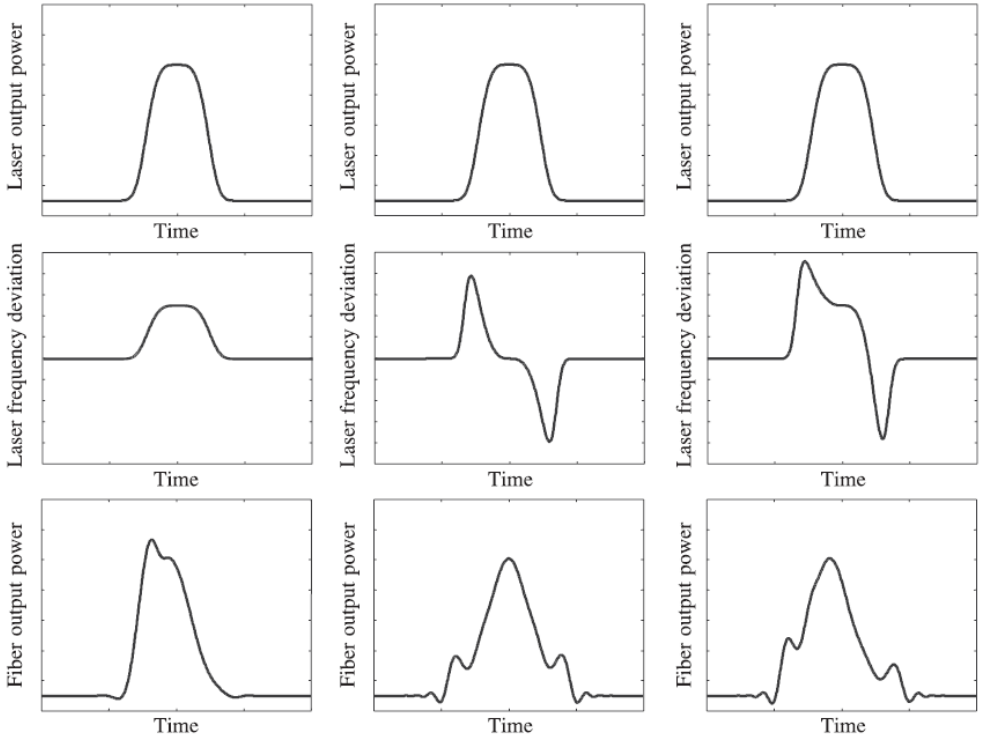

- At low bit rates, chirp >> data bandwidth
- Chromatic dispersion dominated by chirp
- DML is acceptable at low bit rates such as < 622Mb/s (OC-12) or even 2.5Gb/s (OC-48) depending on the reach and the use of dispersion compensating fiber.

© 2014 Finisar Corporation Confidential

Fiber Dispersion Characteristics

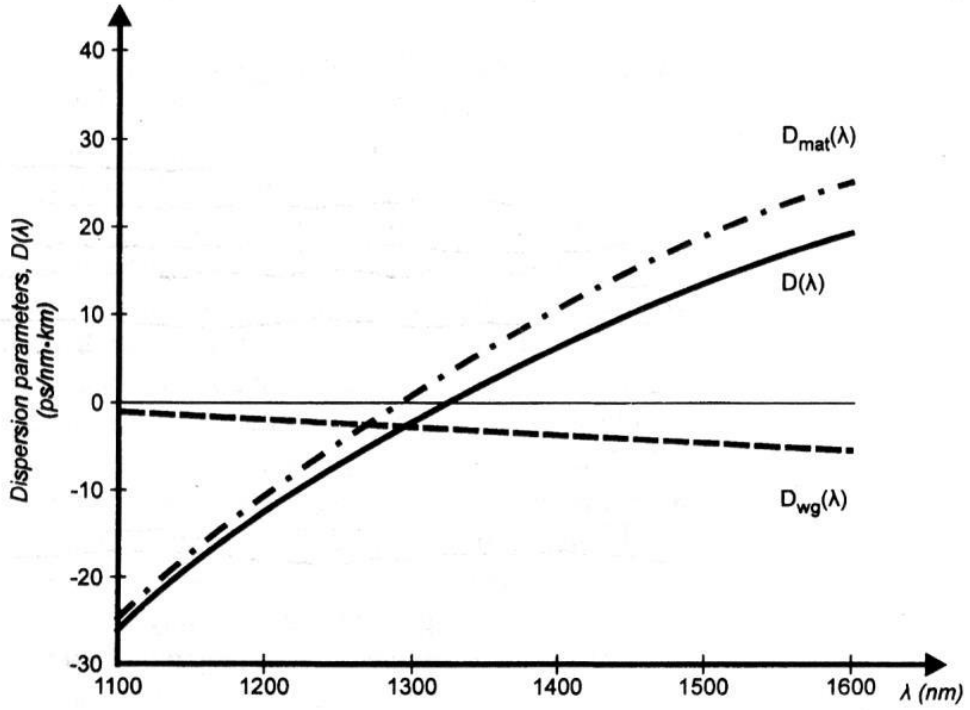

- Dispersion dominated by material, $dn/d\lambda$ and $v_g=c/(n-\lambda dn/d\lambda)$ → $D=d(1/v_g)/d\lambda=-(\lambda d^2n/d\lambda^2)/c$
- At 1310nm, D~0
- At 1550nm, D~17ps/(nm·km)

© 2014 Finisar Corporation Confidential

Current Conventional Telecom Optics

- As line rate increases DML is replaced with external modulators
- Mach-Zehnder (MZ) and Electro-absorption (EA)
- EA has negative transient chirp and in positive dispersion medium → can support 80km at 10Gb/s
- MZ can be biased to give zero-chirp operation hence can go much longer distances.

© 2014 Finisar Corporation Confidential

Mach-Zehnder Modulator

- Based on Mach-Zehnder interferometer
- Differential phase between two arms forms destructive and constructive interference of the photon's electric field to convert phase difference to intensity
- Phase shift can be changed by applied electric field of the modulating signal which changes the index of refraction → accumulating phase shift as light travels along the length of the arm of the MZM → longer length equals more phase shift for a given electric field strength

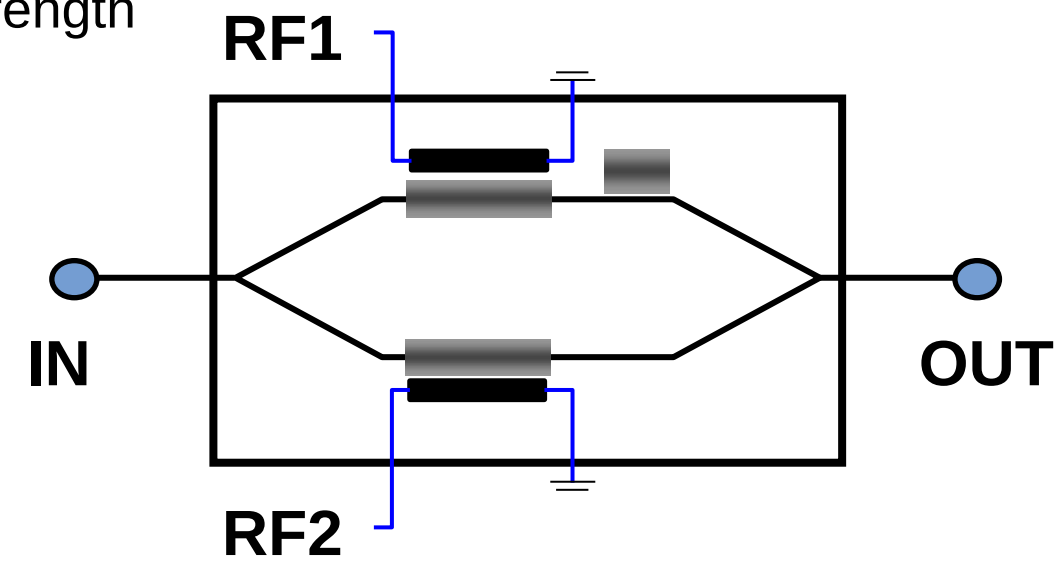

© 2014 Finisar Corporation Confidential

Mach-Zehnder Modulator

- Derivation of MZ Interferometer transfer

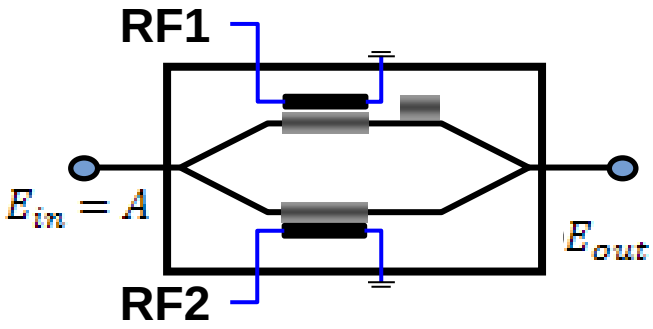

$$E_{out} = \frac{A}{2}\left(e^{j\varphi_1} + e^{-j\varphi_2}\right)$$
$$= \frac{A}{2}(cos\varphi_1 + jsin\varphi_1) + \frac{A}{2}(sin\varphi_2 + jsin\varphi_2)$$
$$= \frac{A}{2}(cos\varphi_1 + sin\varphi_2) + j\frac{A}{2}(sin\varphi_1 + sin\varphi_2)$$
$$= Acos\frac{1}{2}(\varphi_1 - \varphi_1)\left(cos\frac{1}{2}(\varphi_1 - \varphi_1) + jsin\frac{1}{2}(\varphi_1 - \varphi_1)\right)$$
$$= 2Acos\frac{1}{2}(\varphi_1 - \varphi_1)e^{j\frac{1}{2}(\varphi_1 + \varphi_1)}$$

Chirp since φ_1 and φ_2 are time-varying

- For zero chirp,

$$\varphi_1 - \varphi_2 = \Delta\varphi = \frac{\pi}{V_\pi}\Delta V$$
$$\varphi_1 = -\varphi_2$$
$$\rightarrow E_{out} = E_{in}cos\frac{1}{2}\left(\frac{\pi}{V_\pi}\Delta V\right)$$
$$P_{out} = |E_{out}|^2 = {E_{in}}^2 cos^2\left(\frac{1}{2}\left(\frac{\pi}{V_\pi}\Delta V\right)\right)$$

© 2014 Finisar Corporation Confidential

Mach-Zehnder Modulator

- MZM is a perfect phase encoder for digital communication → abrupt shift from 0 to π phase
- V_π can be lowered by increasing the length of the MZM
- But this will increase optical insertion loss, increase capacitance and reduce bandwidth

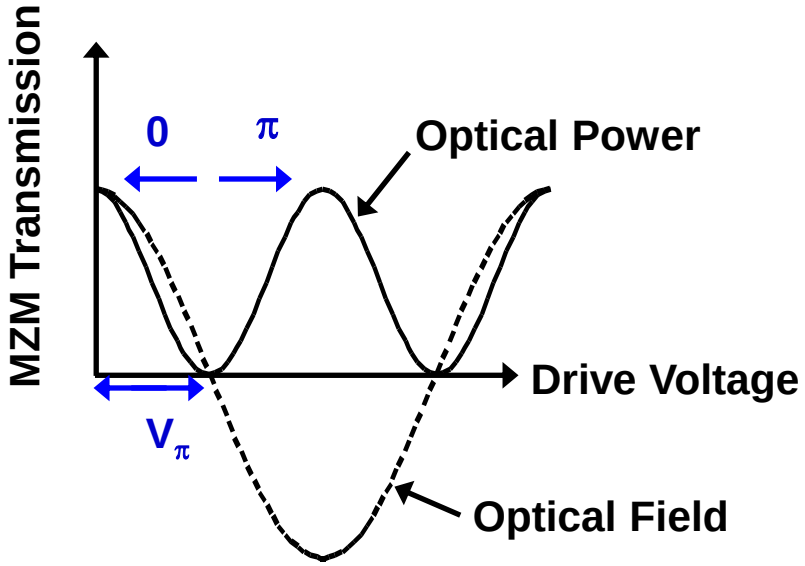

© 2014 Finisar Corporation Confidential

Mach-Zehnder Modulator

- At low bit rates, MZM can be realized as a lumped structure and is essentially dominated by capacitance → system bandwidth is RC-limited
- As bit rate increases, MZM needs to be distributed → bandwidth is defined by cut-off frequency of periodically loaded transmission line
- This results in longer MZM and higher optical loss

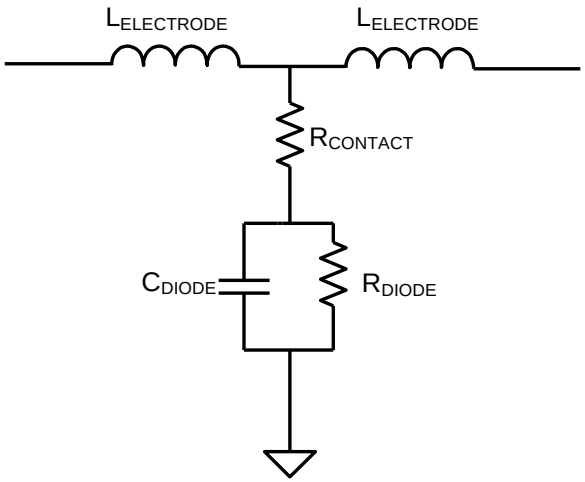

© 2014 Finisar Corporation Confidential

Mach-Zehnder Modulator

- 80Gb/s push-pull MZM
- PhD Thesis of Haitao Chen, Technical U of Berlin

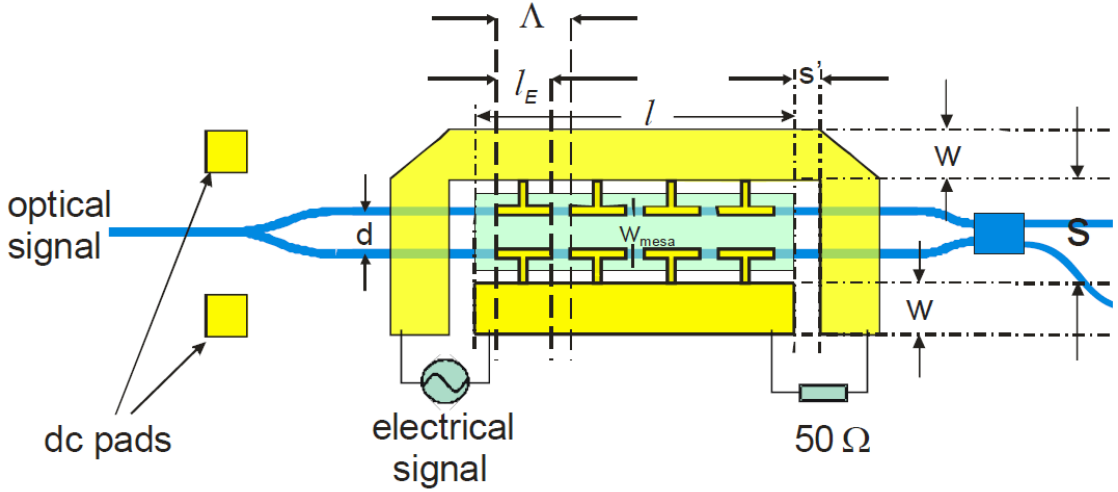

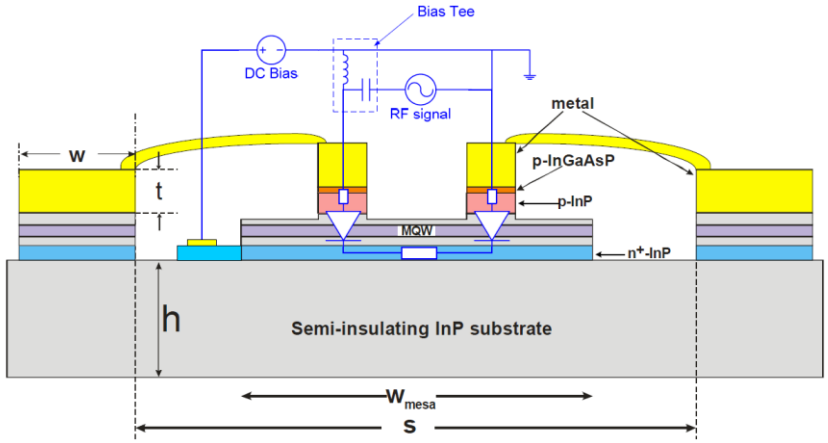

© 2014 Finisar Corporation Confidential

MZM Driver Design Challenge

- For a reasonable optical insertion loss and capacitance, most InP's MZM V_{π} usually is ~4V → 4Vpp single-ended or 2Vpp/side differentially
- At high speed, transistor breakdown decreases → swing could exceed transistor breakdown voltage
- Output stage needs to be large to handle the current to achieve required swing → high power dissipation and degradation in output return loss

© 2014 Finisar Corporation Confidential

MZM Driver Design Challenge

- Driven cascode is used to divide voltage swing across output transistor

IEEE 2005 CUSTOM INTEGRATED CIRCUITS CONFERENCE

10 Gb/s CMOS Laser Driver with 3.3 V_{PP} Output Swing

D. U. Li, L. R. Huang, and C. M. Tsai
SoC Technology Center, Industrial Technology Research Institute
Hsinchu 310, Taiwan, R.O.C.

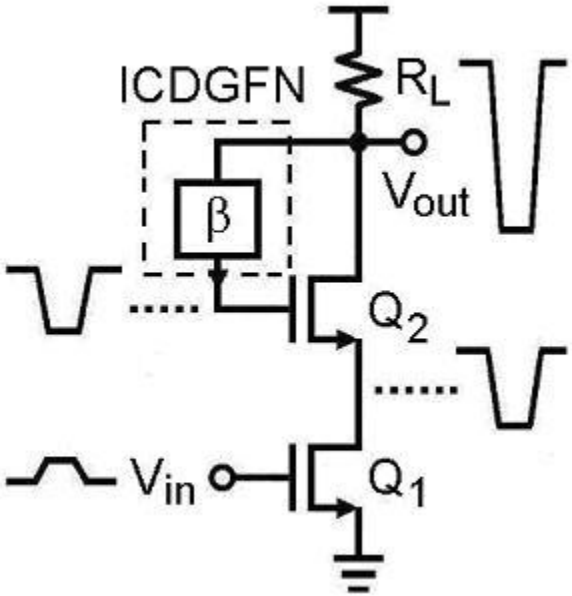

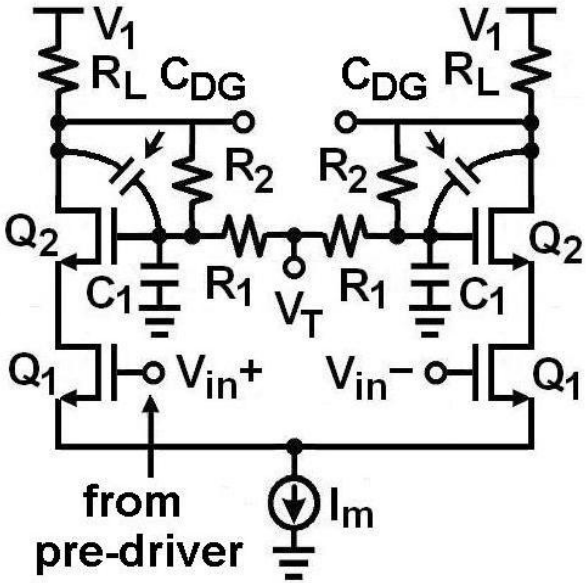

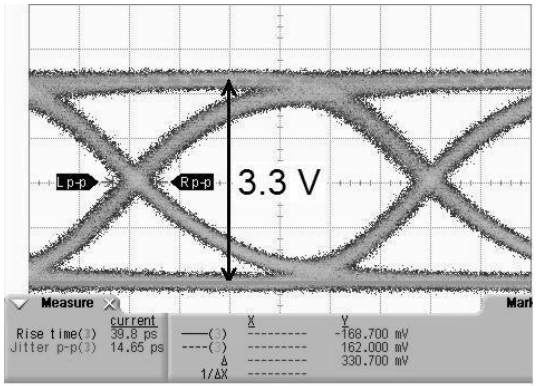

(a)

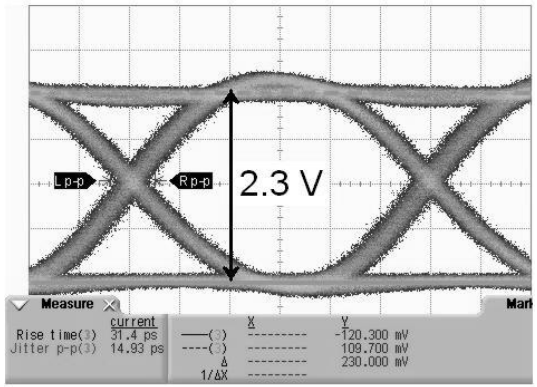

(b)

© 2014 Finisar Corporation Confidential

MZM Driver Design Challenge

IEEE JOURNAL OF SOLID-STATE CIRCUITS, VOL. 39, NO. 10, OCTOBER 2004 1697

High Gain–Bandwidth Differential Distributed InP D-HBT Driver Amplifiers With Large (11.3 V_{pp}) Output Swing at 40 Gb/s

Yves Baeyens, *Senior Member, IEEE*, Nils Weimann, *Member, IEEE*, Pascal Roux, Andreas Leven, *Member, IEEE*, Vincent Houtsma, Rose F. Kopf, Yang Yang, *Member, IEEE*, John Frackoviak, Alaric Tate, Joseph S. Weiner, *Member, IEEE*, Peter Paschke, and Young-Kai Chen, *Fellow, IEEE*

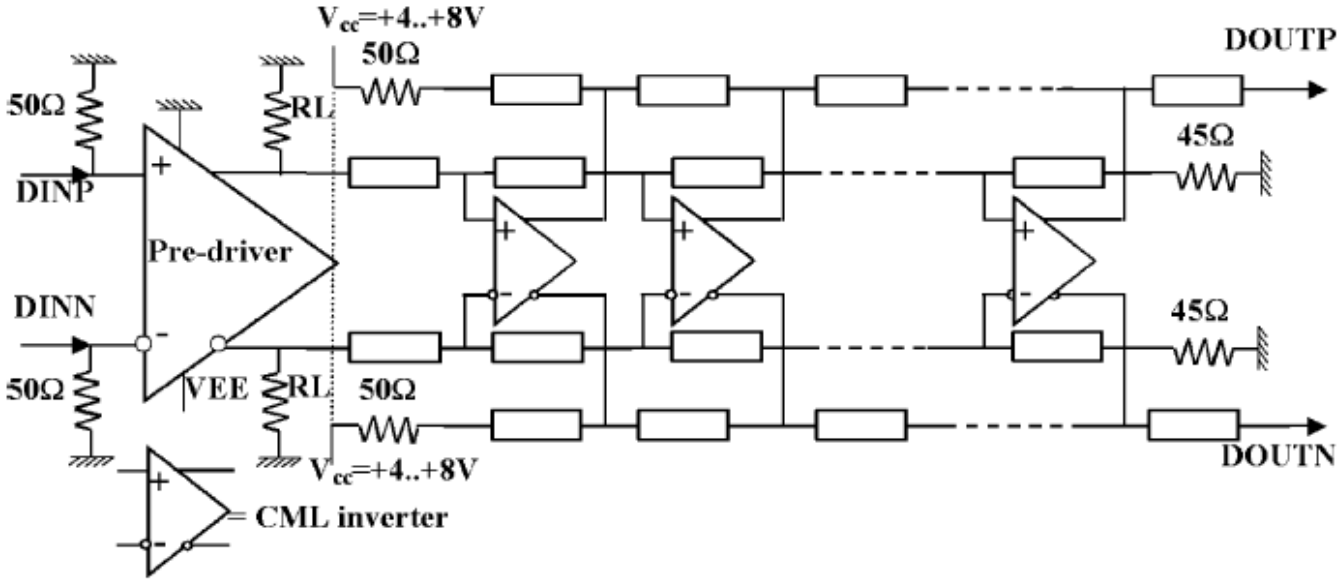

© 2014 Finisar Corporation Confidential

MZM Driver Design Challenge

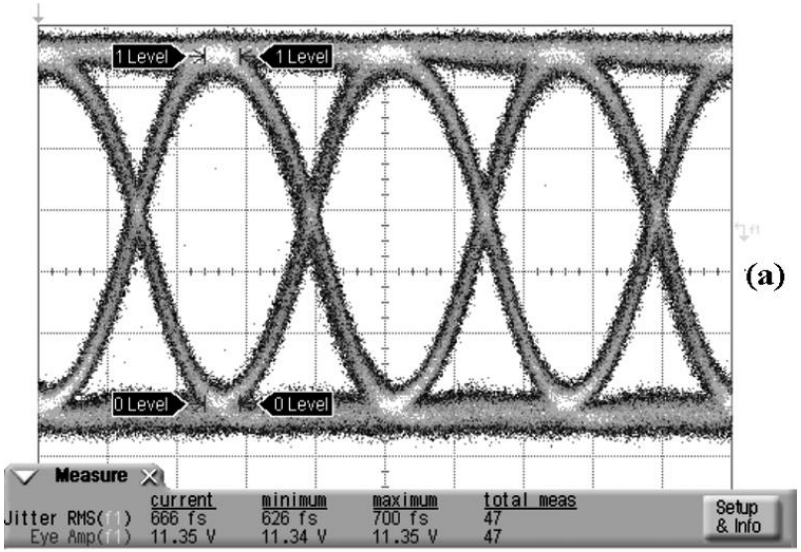

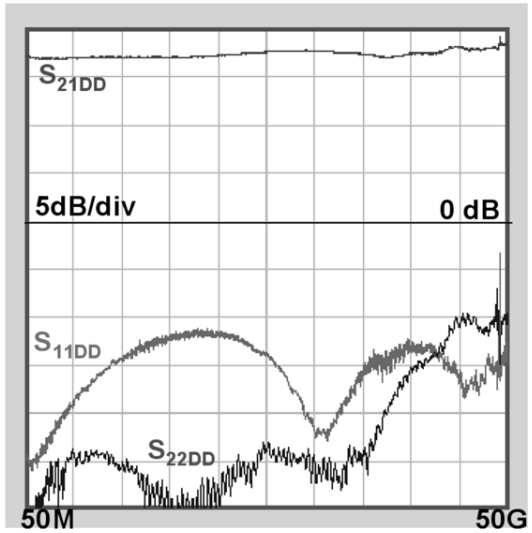

(a)

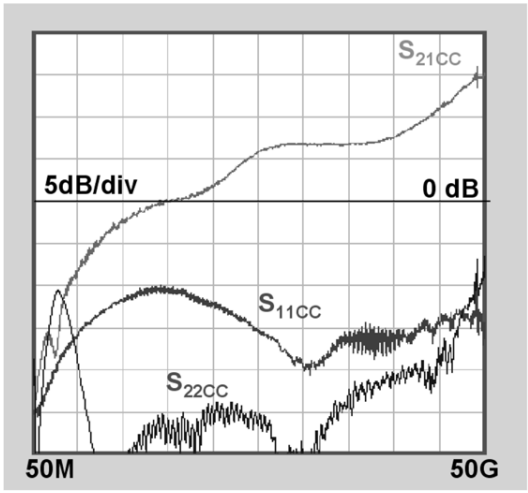

(b)

© 2014 Finisar Corporation Confidential

Effects of Chromatic Dispersion

- Consider in the case of intensity modulation with direct detection (IMDD)

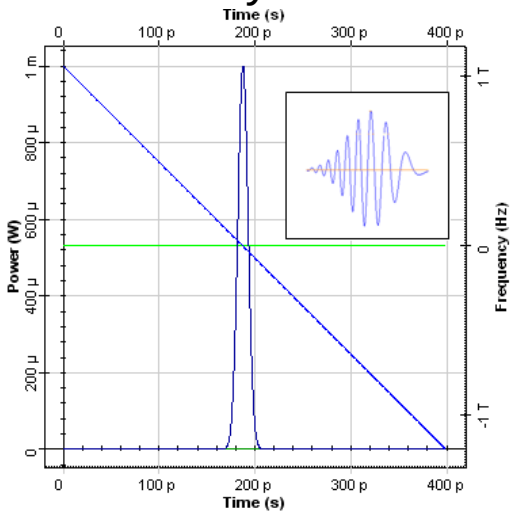

- In frequency domain, double side-band → negative frequency components (frequencies below carrier) travel at different speed than the positive frequency components. The distance of fiber will result in some specific negative frequency having π phase shift with positive frequency → destructive interference → null in frequency response.
- Longer fiber length → lower null frequency
- Net result → Pulse widening or equivalent to bandwidth reduction

© 2014 Finisar Corporation Confidential

Receiver Design Requirements

- For good performance in the presence of CD
- Low-noise TIA
- Amplified system with EDFA has signal-dependent noise and,
- CD results in duty-cycle distortion with low cross-point → Need for threshold adjust
- Requires linear TIA if threshold adjust is in the decision circuit

© 2014 Finisar Corporation Confidential

Receiver Design Requirements

- Two main types of TIA: common-gate (or common-base) and shunt feedback (SFB)

Common Gate

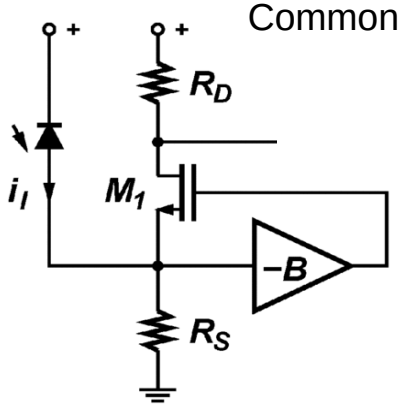

Shunt Feedback

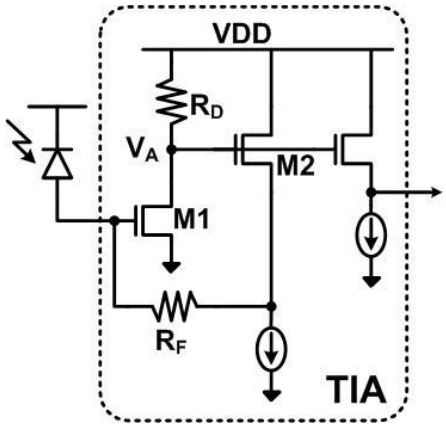

$$\langle i_n i_n^* \rangle = \frac{4kT}{R_S} + 4kT\Gamma g_m \left(\frac{1+\omega^2 C_T^2 R_S^2}{(1+g_m R_S)^2 + \omega^2 C_T^2 R_S^2} \right) + \frac{4kT}{R_D} \left(\frac{(1+g_m R_S)^2 + \omega^2 C_T^2 R_S^2}{(g_m R_S)^2} \right)$$

$$\langle i_n i_n^* \rangle = \frac{4kT}{R_f} + \frac{4kT}{R_D g_m^2} \left(\frac{(1+g_m R_D)^2}{R_f^2} + \omega^2 C_T^2 \right) + \frac{4kT\Gamma}{g_m} \left(\frac{1}{R_f^2} + \omega^2 C_T^2 \right)$$

- For a given R_f in SFB and g_m in CG that result in similar RC time constant, g_m in SFB can be made larger by increasing M1's current without incurring headroom issue → SFB can be optimized for lower noise front-end

© 2014 Finisar Corporation Confidential

Clock and Data Recovery

- For metro applications that use 1:1 retimer, SONET jitter performance can be tricky
- Bandwidth limitation and reflection can produce bit-to-bit jitter
- This jitter can be observed as double strike in the eye diagram
- SONET frame header sequence's repetitive nature along with this bit-to-bit jitter can increase jitter generation in PLL with wide enough bandwidth
- Jitter transfer requires low jitter peaking <0.05dB

© 2014 Finisar Corporation Confidential

Clock and Data Recovery

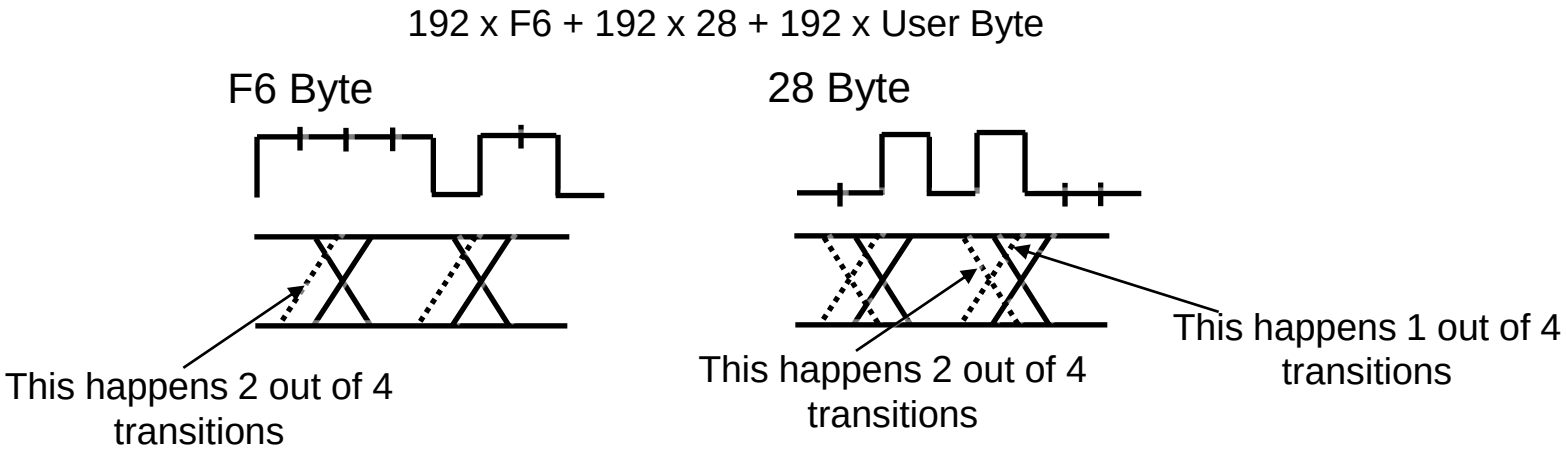

- 153.6ns repetition is long enough for PLL with bandwidth > 3MHz to almost perfectly track out the phase shift
- Lower bandwidth PLL will track less but jitter tolerance will degrade
- Dual-loop architecture decouples this relationship*

*

T. H. Lee and J. F. Bulzacchelli, "A 155-MHz Clock Recover Delay- and Phase-Locked Loop," *Journal of Solid-State Circuit*, pp. 1736-1746, December 1992.
J. G. Kenney, et. al, "A 9.95-11.3-Gb/s XFP Transceiver in 0.13um CMOS," *Journal of Solid-State Circuit*, pp. 2901-2910, December 2006.

© 2014 Finisar Corporation Confidential

Clock and Data Recovery

- Example of effects of SONET header in presence of input jitter

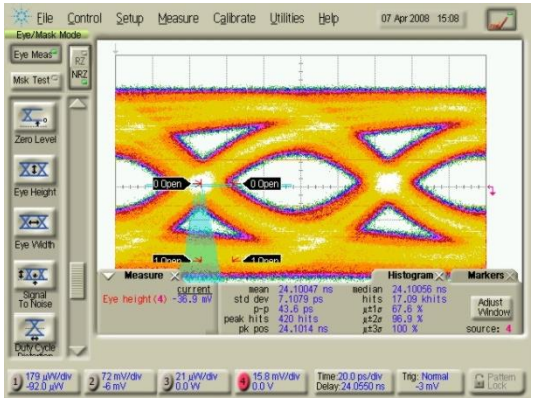

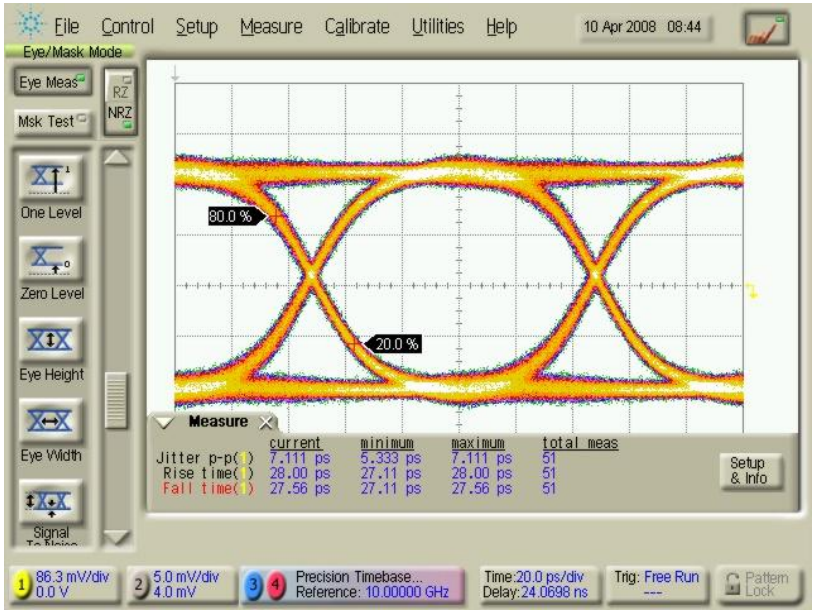

PRBS-31 Without SONET Frame

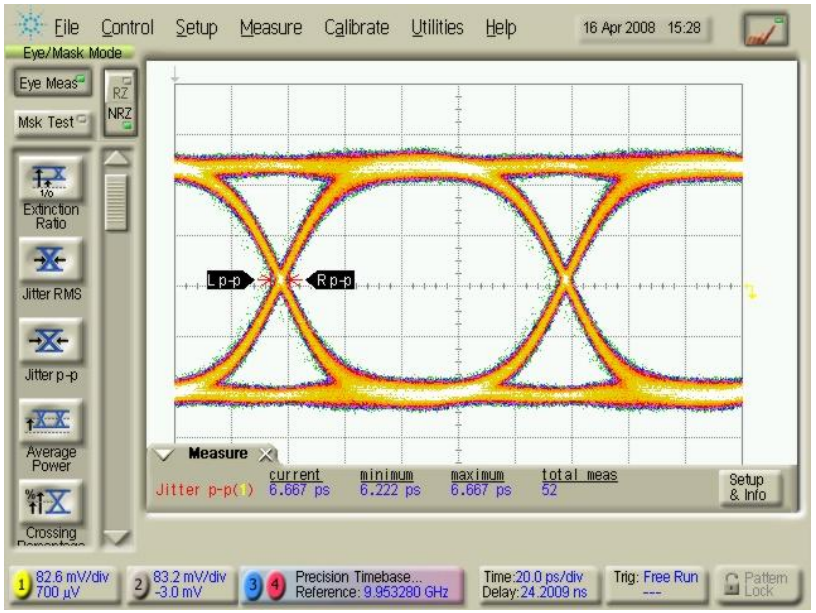

PRBS-31 With SONET Frame

© 2014 Finisar Corporation Confidential

Dual-Loop CDR

Example of Dual-loop CDR - Block Diagram to decouple Jitter Transfer and Jitter Tolerance

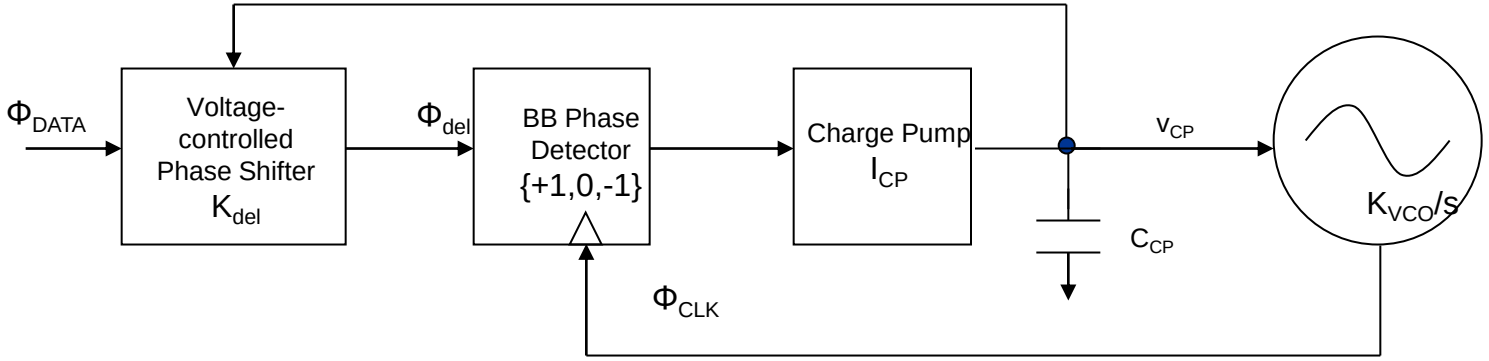

- As long as the phase detector and charge pump moves V_{CP} and hence phase shifter at a rate equal to the rate of input phase change then the phase shifter will absorb the input phase change <- Jitter Tolerance mask is used to design this
- This means the phase going into the phase detector will changes less → less jitter in the recovered clock → equivalent to low jitter transfer bandwidth
- At low jitter frequencies the integral loop takes over since it has higher gain and the cross-over frequency is the 3dB bandwidth

© 2014 Finisar Corporation Confidential

Dual-Loop CDR

- Design equations

$$\frac{I_{CP} DFK_{del} 2\pi}{C_{CP}} \geq 2\pi^2 f_J UI_{pp}$$

$$f_{3dB} = \frac{1}{2\pi\tau} = \frac{K_{VCO}}{2\pi K_{del}} \text{ Hz}$$

Small-signal closed-loop transfer

$$\frac{\phi_{CLK}}{\phi_{DATA}} = \frac{K_{PD} K_{VCO}}{s^2 + sK_{del} K_{PD} + K_{PD} K_{VCO}}$$

- So for I_{CP}=100uA, C_{CP}=25pF, K_{del}=15UI/V and K_{VCO}=100MHz/V, the CDR can tolerate 0.5UI of input jitter at 8MHz and has jitter transfer bandwidth of 1MHz
- Closed-loop transfer function contains no zero in the numerator
- Conventional single-loop PLL requires a compensating zero → a zero in closed-loop response → some jitter peaking

Conventional CDR

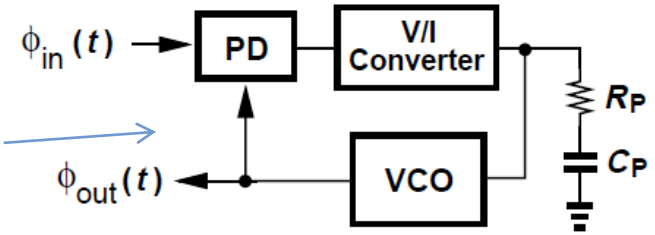

© 2014 Finisar Corporation Confidential

Optical Duobinary

- First attempt at mitigating CD by spectral shaping and carrier phase modification

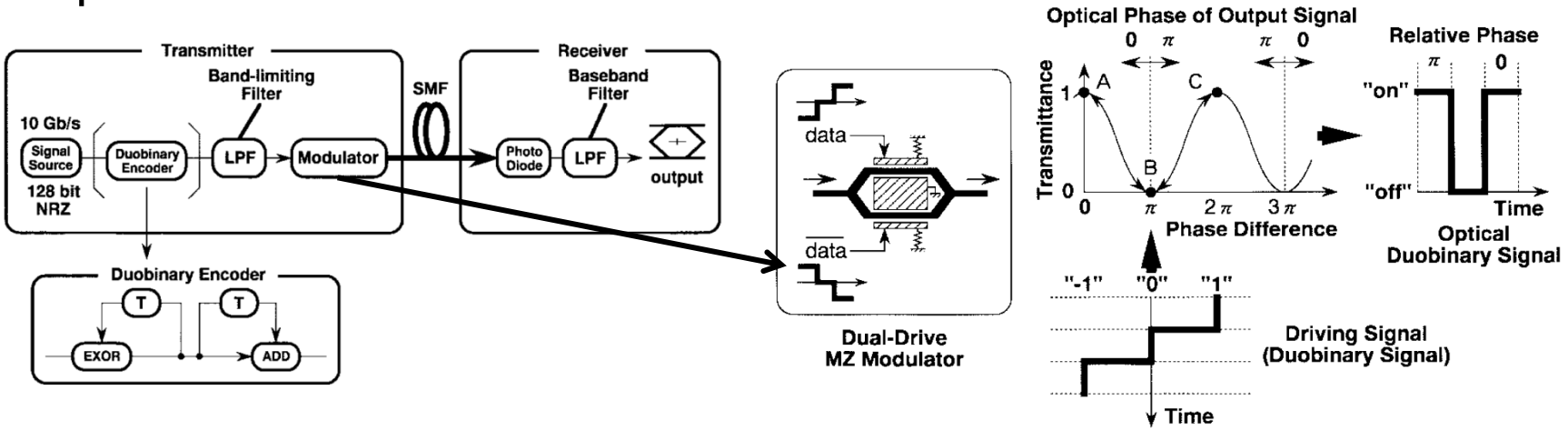

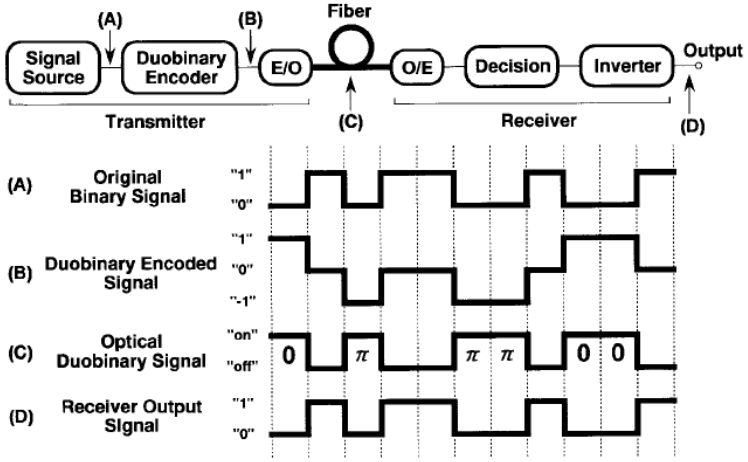

- Driving across the null of MZM power transfer curve → electric field flips polarity
- Pulse broadening effect of CD would have created an interference at the 0 without π phase shift
- π phase shift results in destructive interference

Destructive interference

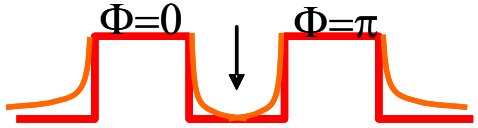

© 2014 Finisar Corporation Confidential

Optical Duobinary

- Additional advantage of optical duobinary is it has narrower spectrum → more dispersion tolerant

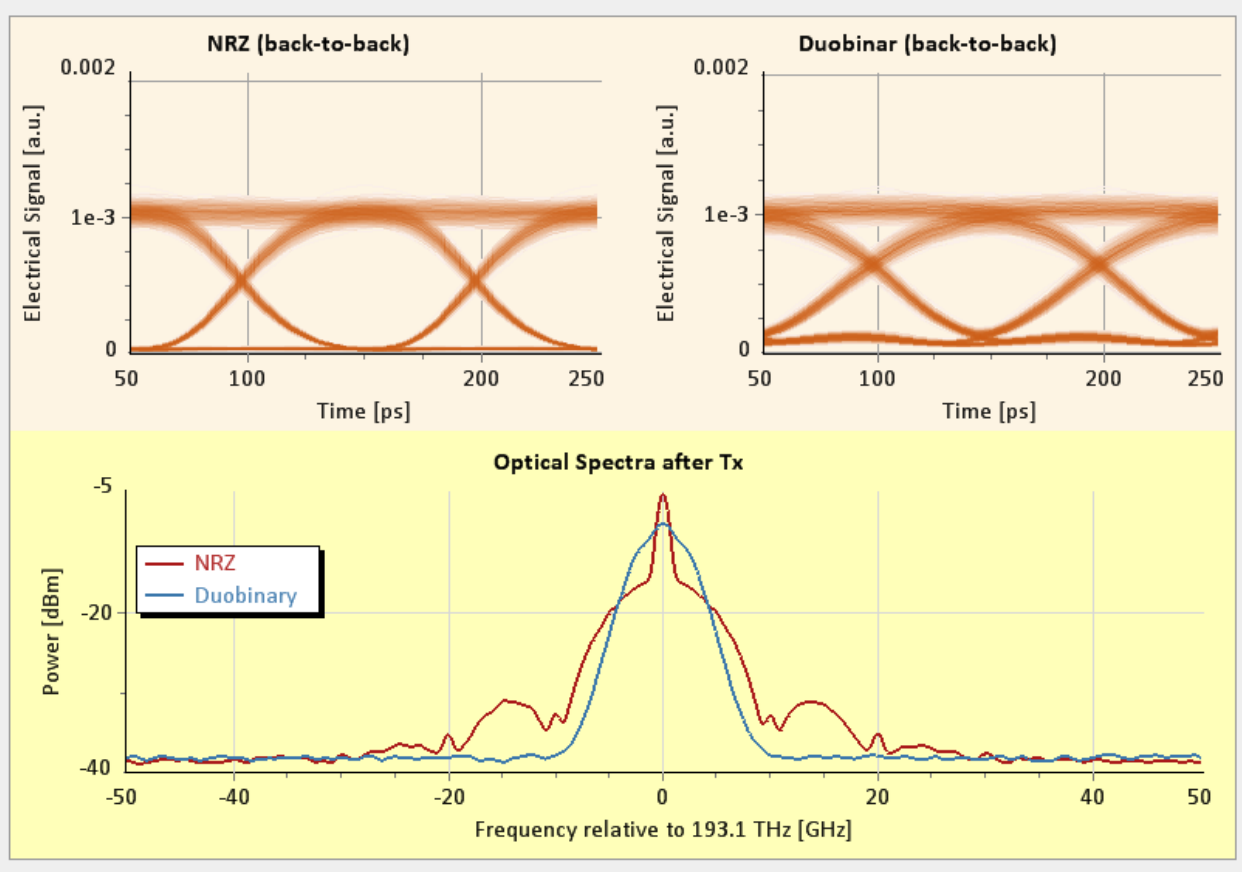

© 2014 Finisar Corporation Confidential

Optical Duobinary

- Experimental results

1530 JOURNAL OF LIGHTWAVE TECHNOLOGY, VOL. 15, NO. 8, AUGUST 1997

Dispersion-Tolerant Optical Transmission System
Using Duobinary Transmitter
and Binary Receiver

Kazushige Yonenaga and Shigeru Kuwano

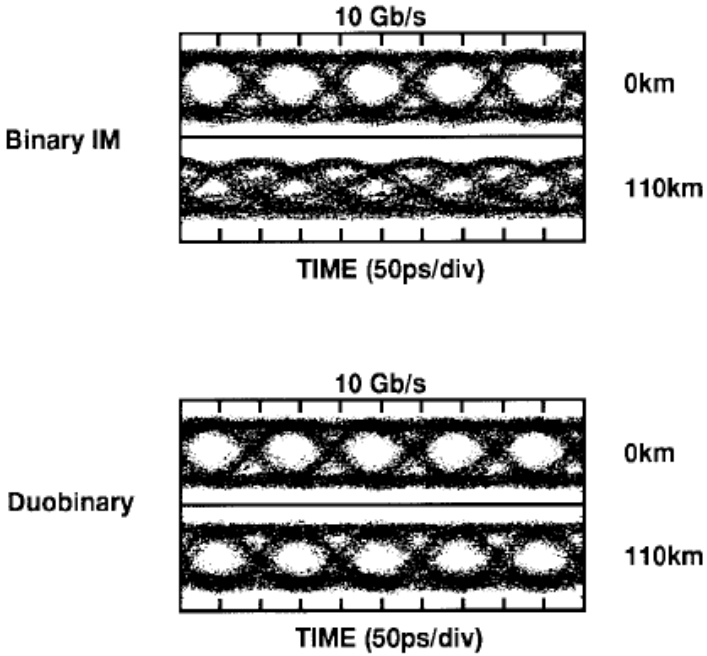

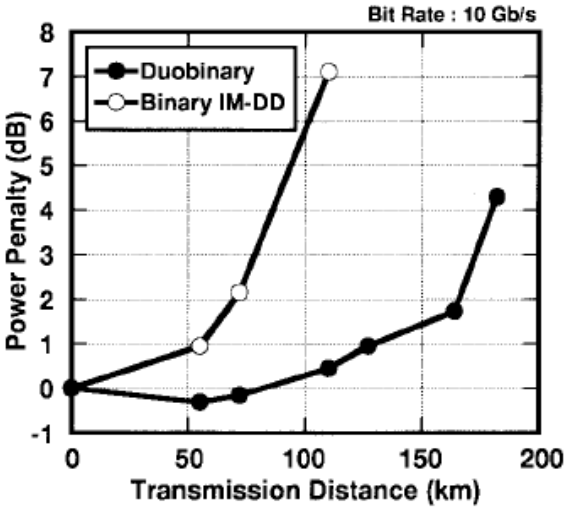

© 2014 Finisar Corporation Confidential

Optical Duobinary Filter Design

- Tx filter design ~ 1/3 of signal BW
- To preserve fidelity → absorptive filter is needed to maintain adequate return loss for signal integrity

Example of 28G ODB absorptive filter

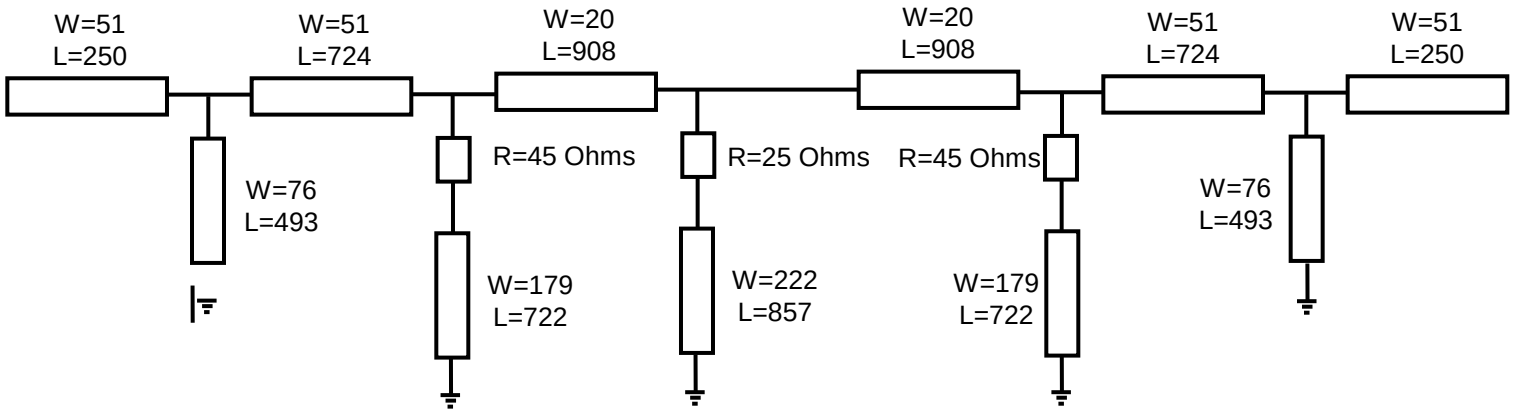

© 2014 Finisar Corporation Confidential

Optical Duobinary Filter Design

- Simulated comparison between absorptive and an ideal BT filter

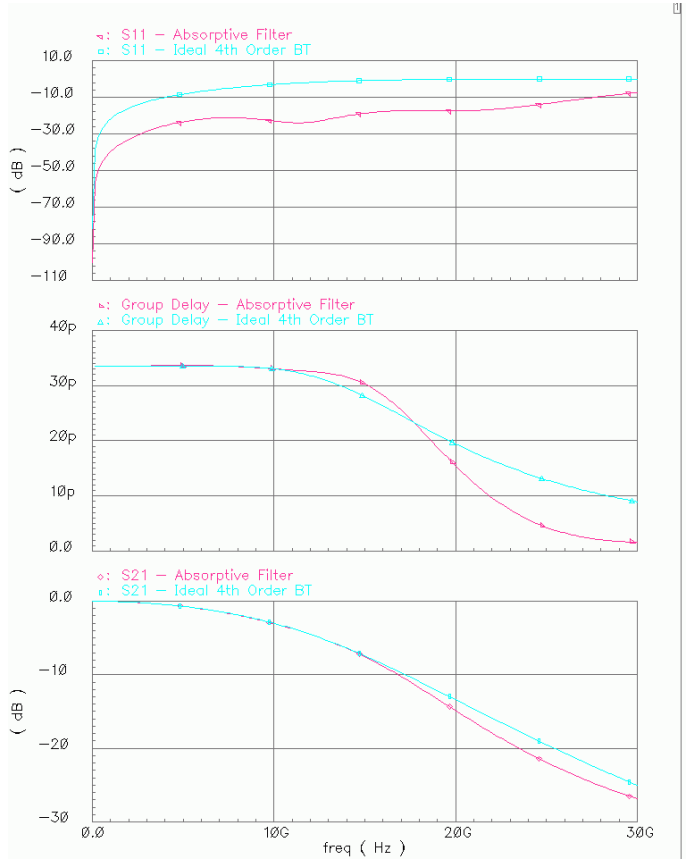

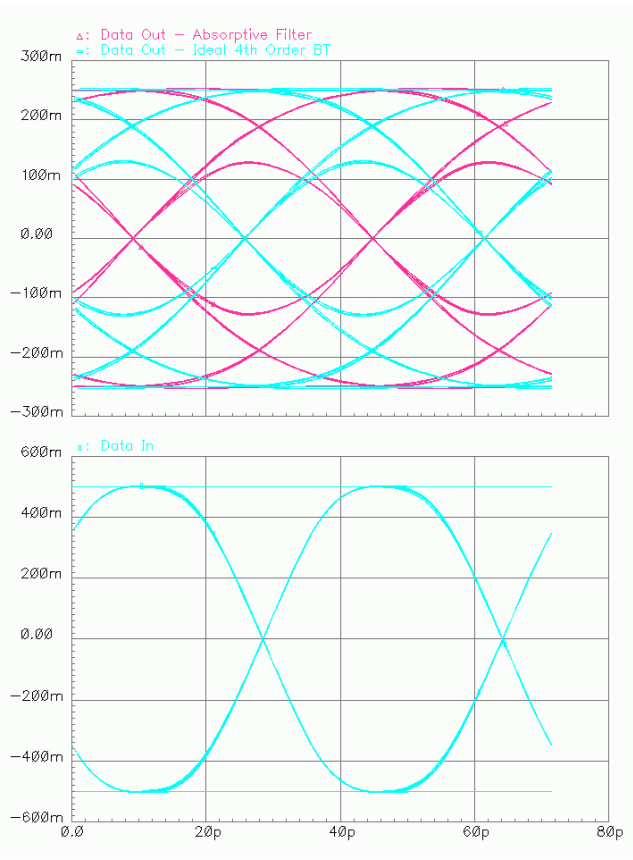

© 2014 Finisar Corporation Confidential

Chirp-Managed Laser

- Chirp Managed Laser = Directly Modulated Laser + Passive Optical Filter
- Laser biased high → FSK mode with small ER ~ 1-2dB
- Optical filter converts FM to AM increasing ER to >12dB

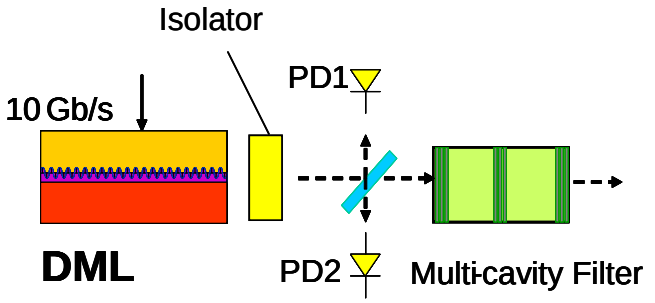

Chirp Managed Laser

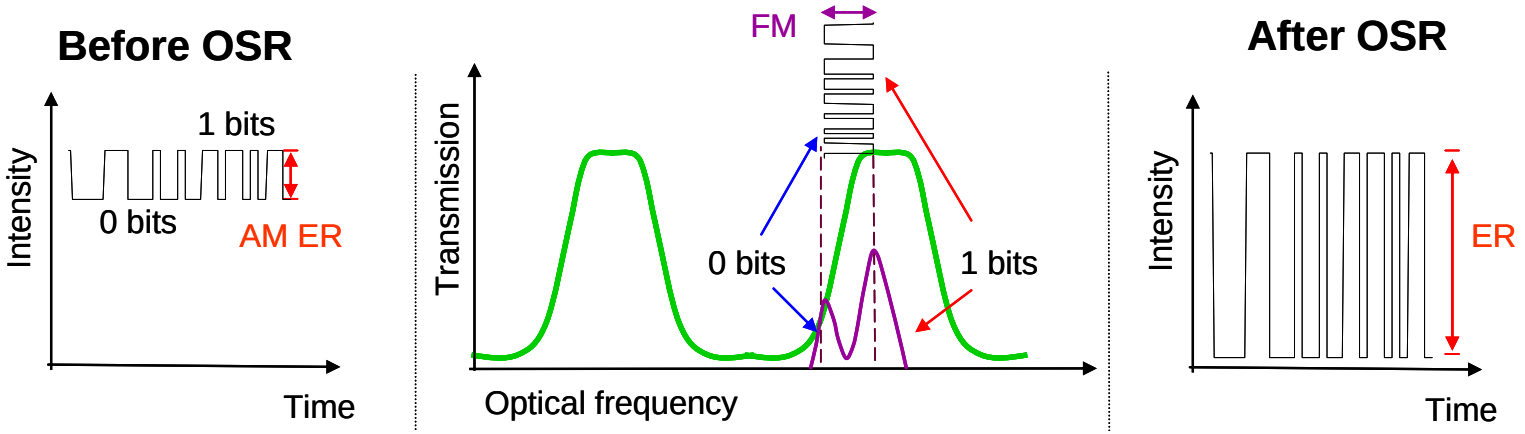

Optical Spectrum Reshaper

© 2014 Finisar Corporation Confidential

Chirp-Managed Laser In Action

- Adiabatic Chirp to ~ ½ the bit rate→ 5 GHz for 10 Gb/s (FM characteristic of the laser by design)
- CML Phase Rule:
  - 1 bits separated by odd # of 0 bits are π out of phase by the integration of the shift in frequency over 1 bit period
- Destructive interference of 1 bits in the middle 0 bit slot keeps eye open after fiber dispersion ← similar to ODB

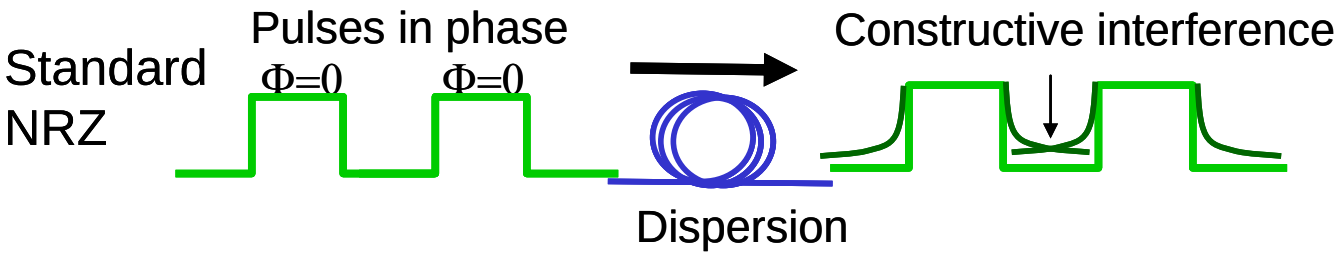

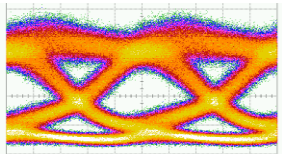

EML @ 80 km

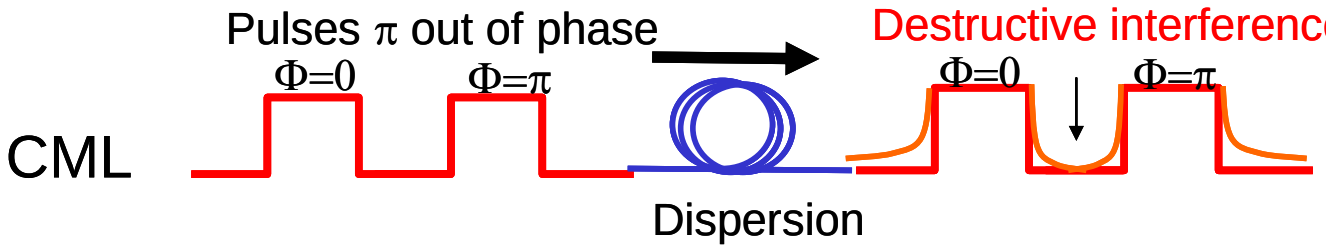

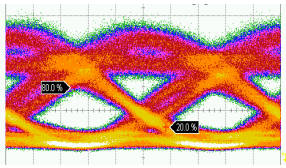

CML @ 200 km

© 2014 Finisar Corporation Confidential

Transmitter E-Field Predistortion

- Nortel's Warp technology
- Data sequence determines appropriate amplitude and phase modulation of Tx optical E-field using IQ modulator
- Conventional direct detection at the Rx
- Optimize for dispersion using information (such as BER) fed back from Rx.

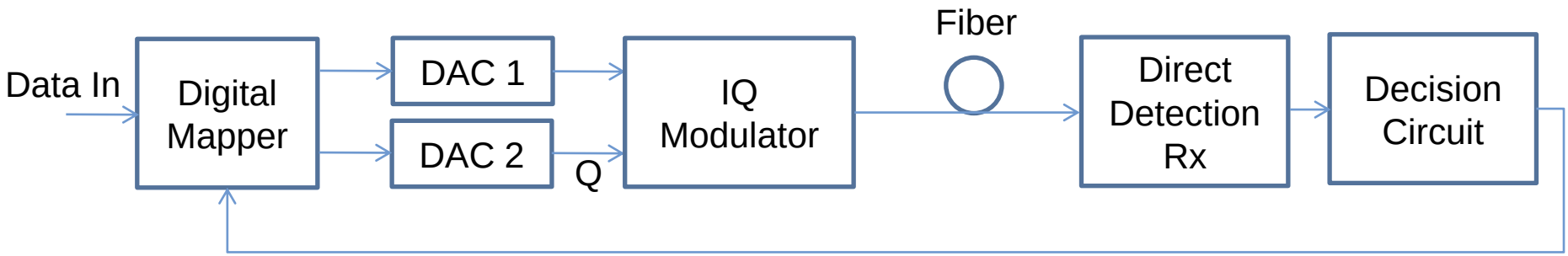

© 2014 Finisar Corporation Confidential

Transmitter E-Field Predistortion

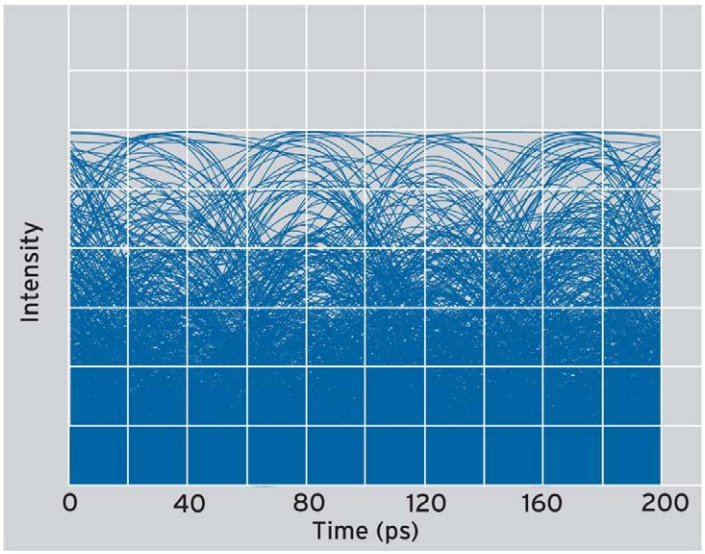

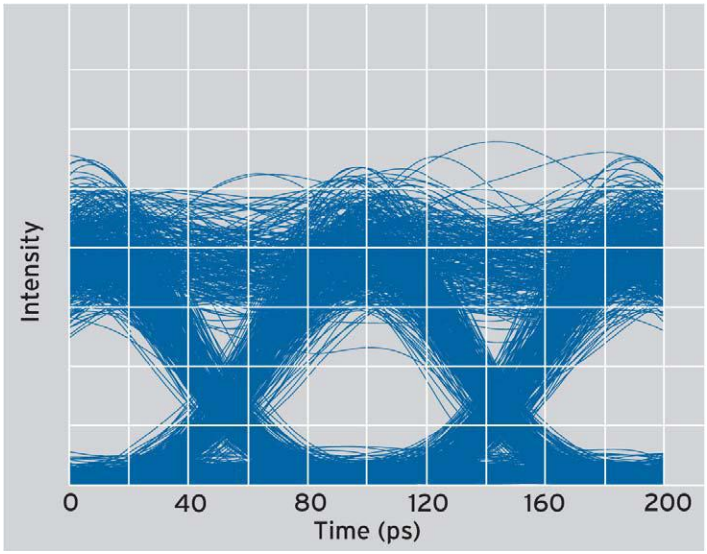

- Back-back vs. 1600km of uncompensated fiber
- ~4M gates and 20GS/s 6-b DAC
- Still in the realm of advanced BiCMOS

© 2014 Finisar Corporation Confidential

High-Order Modulation and Coherent Detection

- Enabled by CMOS advancement
  - Low-power DSP core
  - Low-power high ENOB ADC
- More detailed circuit and system discussions in the next two courses

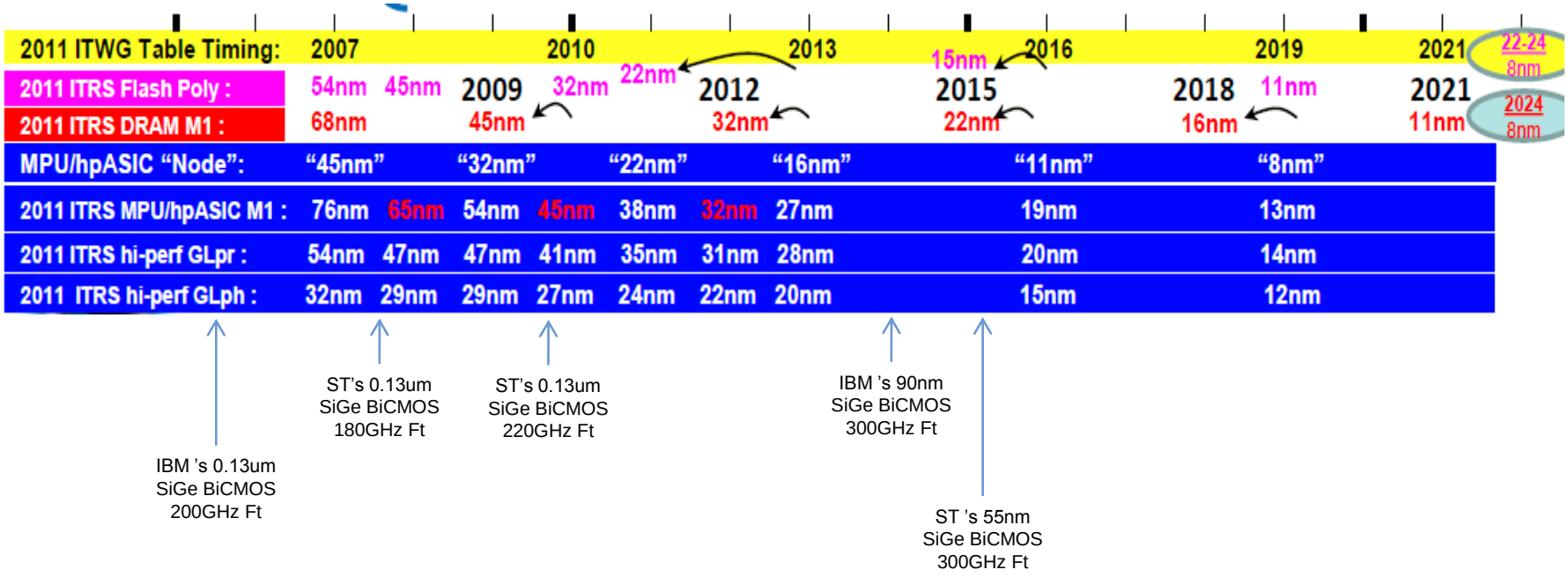

© 2014 Finisar Corporation Confidential

Outline

- Overview of the Optical Market
- Telecom Optics
- Datacom Optics
- Parallel Optics

© 2014 Finisar Corporation Confidential

Datacom Optics

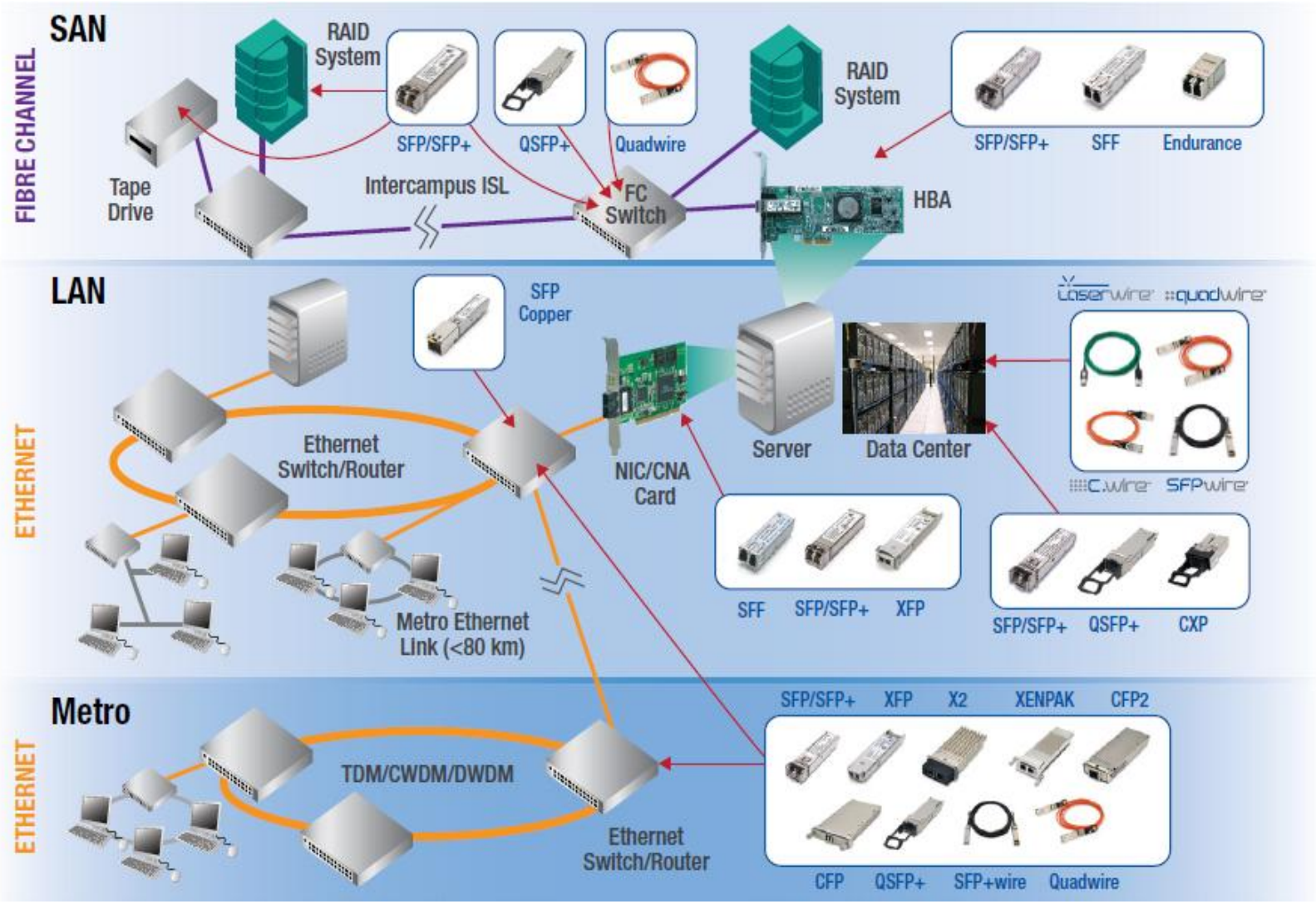

© 2014 Finisar Corporation Confidential

Datacom Optics

- Economic drivers:
  - Cost → Miniaturization to address high port density
  - Reach (100m-10km) → Dispersion not dominant factor and link budget determined by modal bandwidth (MMF) and optical loss (1310nm over SMF) → lower cost of direct modulation
  - Power → More important than telecom since end user's applications require high port density
- Driven to standardizations and multi-source agreements (MSA's)
- Competing directly with copper solutions at <100m reaches up to 10Gb/s

© 2014 Finisar Corporation Confidential

Technology Evolution

- Bandwidth-Density is driver for future optical interconnects
- Reduction in power/bit is critical to system performance
- Standardization drives volume manufacturing
- Miniaturization for reduced power and cost
- Move to pluggable for pay-as-you-grow business model

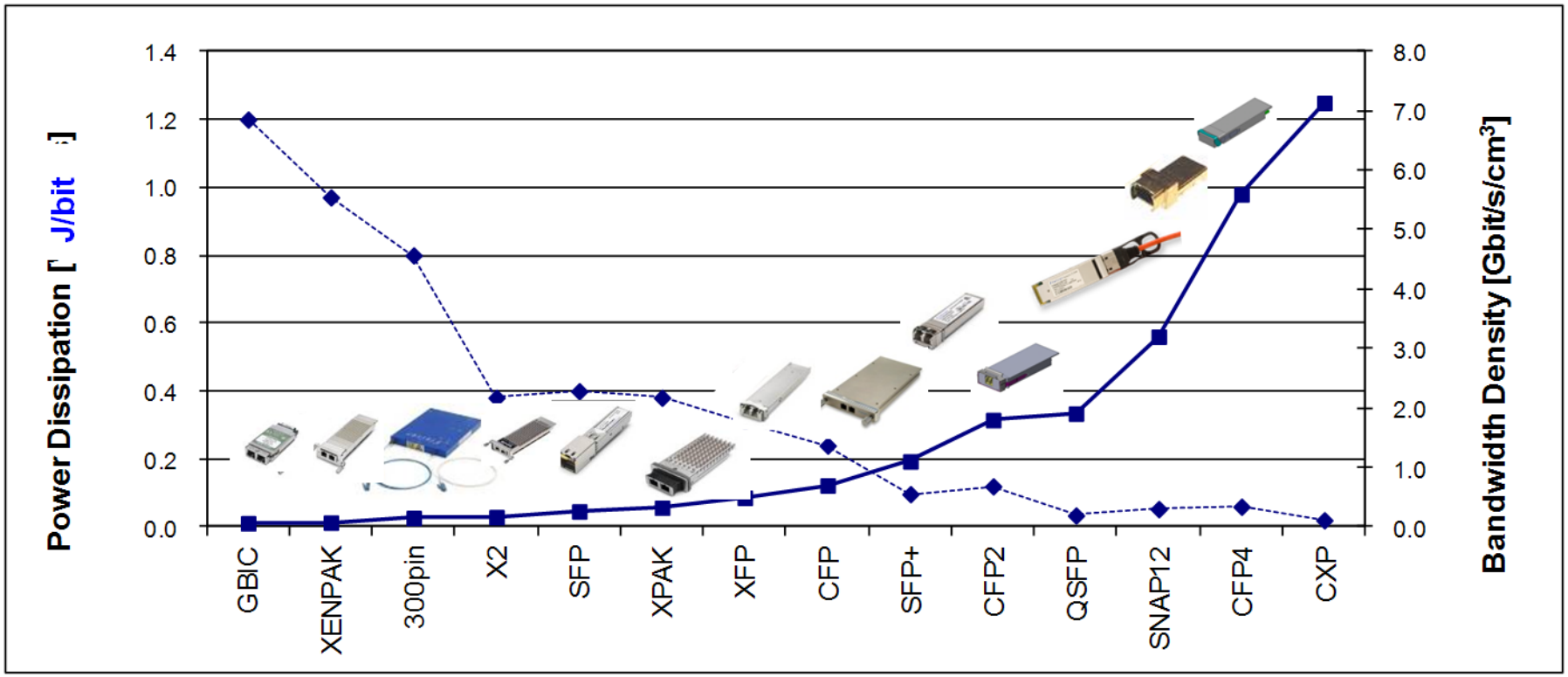

© 2014 Finisar Corporation Confidential

Main Standards and MSA's

- Standards:
  - Ethernet driven by IEEE
  - Transport is driven by ITU
  - Fiber Channel driven by FCIA
  - OIF defines electrical interface
- MSA's:
  - SFP+
  - XFP
  - QSFP
  - CFP

- See Appendix 1 for more details on Standards and Reaches

© 2014 Finisar Corporation Confidential

Optical Media

Multimode Fiber

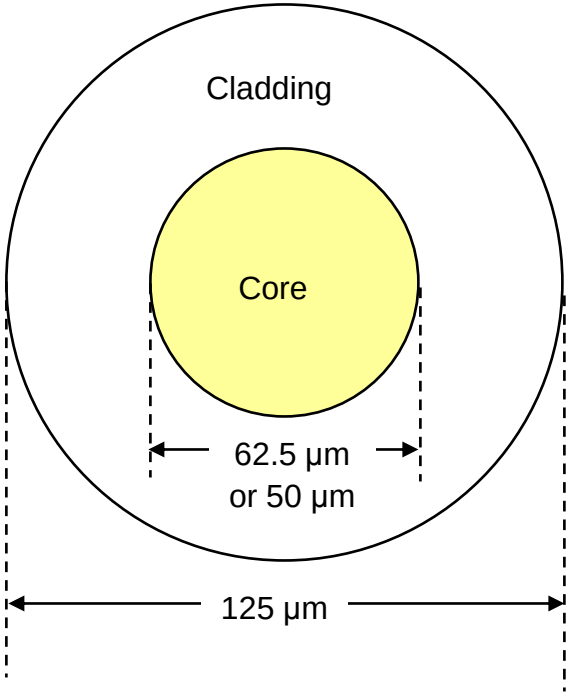

- Core has parabolic index profile to minimize delay between different transverse modes.
- Reach limited by modal dispersion

Single Mode Fiber

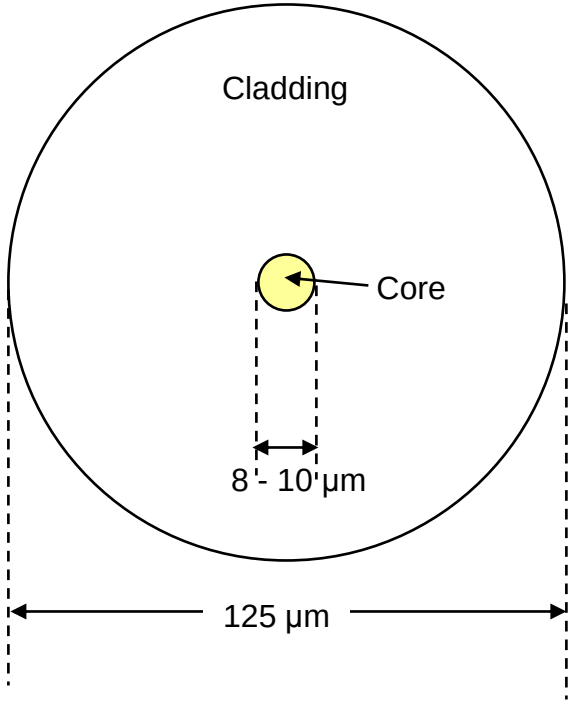

- Small core supports only one transverse mode for l > 1270 nm.
- Reach limited by either CD or loss

© 2014 Finisar Corporation Confidential

Optical Sources

FP LASER - Fabry-Perot edge-emitting laser. Coat chip facets to produce feedback. Usually, a dielectric waveguide stripe is used for lateral optical confinement. Multiple longitudinal modes present in output.

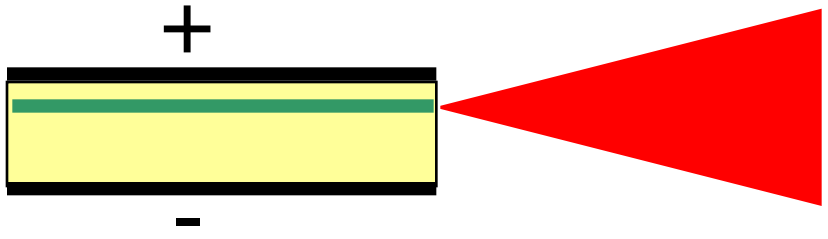

Used in shorter SMF applications <= 10 Gb/s. Also used in Gigabit Ethernet for MMF/SMF applications.

© 2014 Finisar Corporation Confidential

Optical Sources

DFB LASER - Distributed-feedback edge-emitting laser. Similar structure to FP laser, but with grating layer to provide distributed feedback. Only two longitudinal modes possible but one mode dominates by the design of the phase of gratings. Side-mode suppression ratio (SMSR) specifies ratio between the modes.

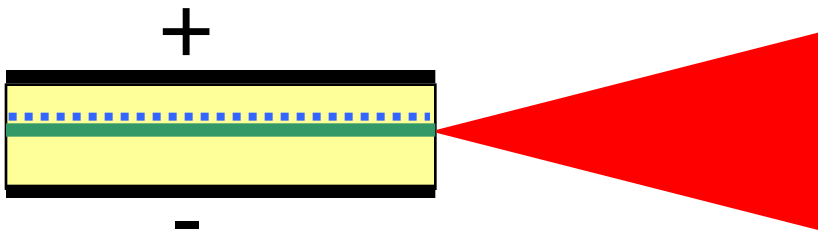

Primarily used for longer SMF applications such as 10G 10km. Low-cost Gen 2 100G 10km also uses DFB laser

© 2014 Finisar Corporation Confidential

Optical Sources

EA-DFB LASER – Electro-Absorption Modulator integrated with DFB laser. Used for high-speed applications requiring low chirp. Available in both 1550-nm and 1310-nm

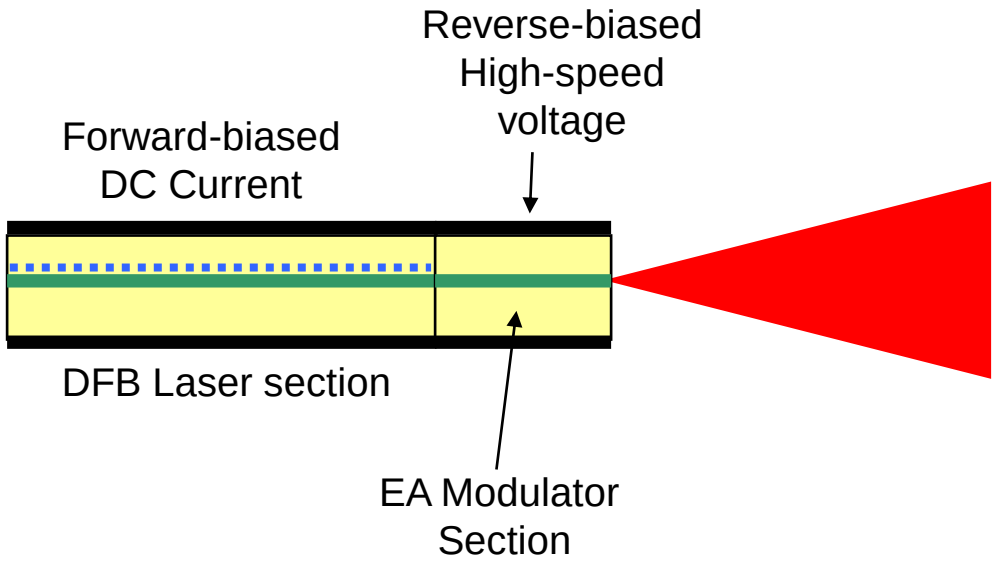

1550-nm device used today in 10G 80-km and 1310-nm device used in some 100G 10 km short-reach applications

© 2014 Finisar Corporation Confidential

Optical Sources

VCSEL - Vertical cavity surface-emitting laser. Quarter-wave stacked mirrors grown above and below active region to produce micro-optical cavity with axis normal to wafer plane. Circular output beam with multiple transverse modes and one longitudinal modes

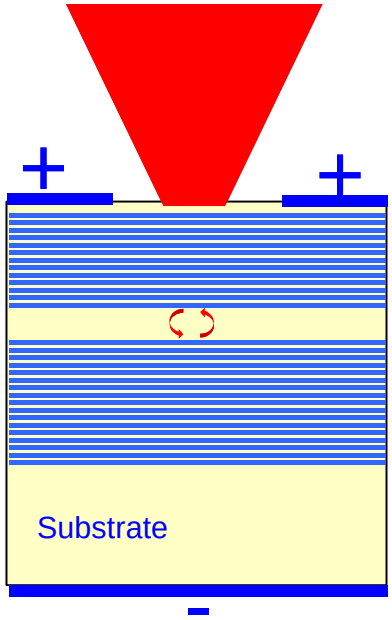

Used for most MMF applications ≥ 1 Gb/s

© 2014 Finisar Corporation Confidential

Laser Characteristics

- Coupled Differential Rate Equations

$$\frac{dN}{dt} = \frac{J}{2de} - \Phi b(N - N_\alpha) - \frac{N}{\tau_N}$$

$$\frac{d\Phi}{dt} = \Phi b\left(N - N_\alpha\right) - \frac{\Phi}{\tau_P} + \frac{f_s N}{\tau_N}$$

- Describe both DC and AC (small and large-signal) behaviors of the laser

© 2014 Finisar Corporation Confidential

Laser Characteristics

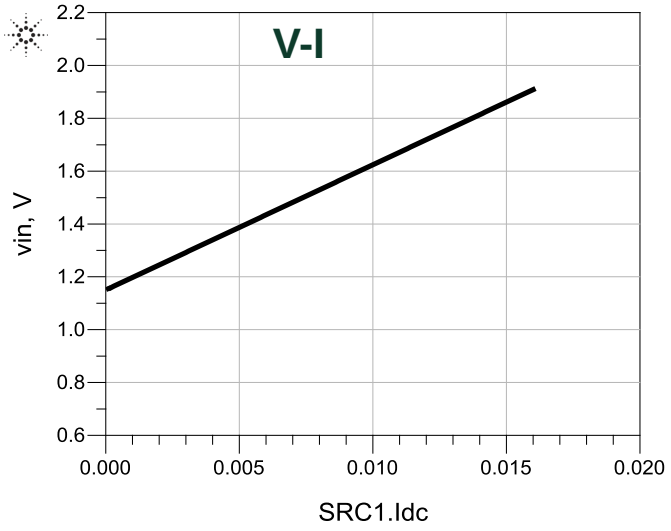

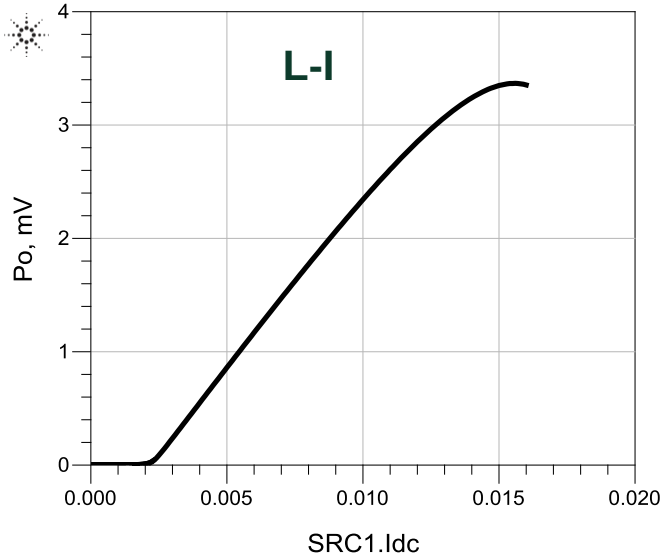

- A VCSEL Example

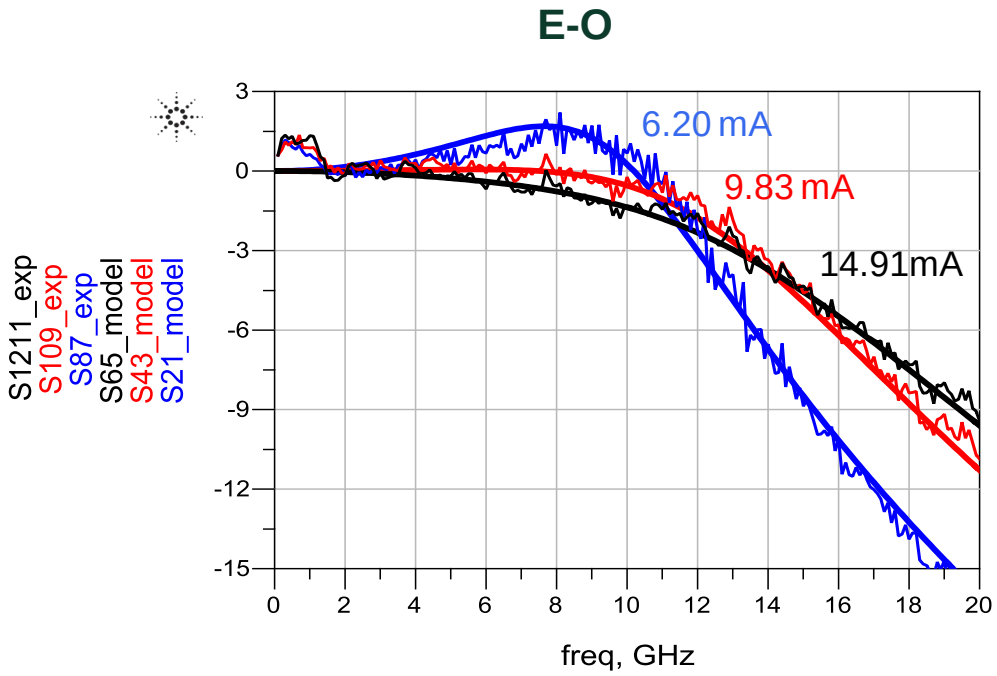

© 2014 Finisar Corporation Confidential

Laser Large-Signal

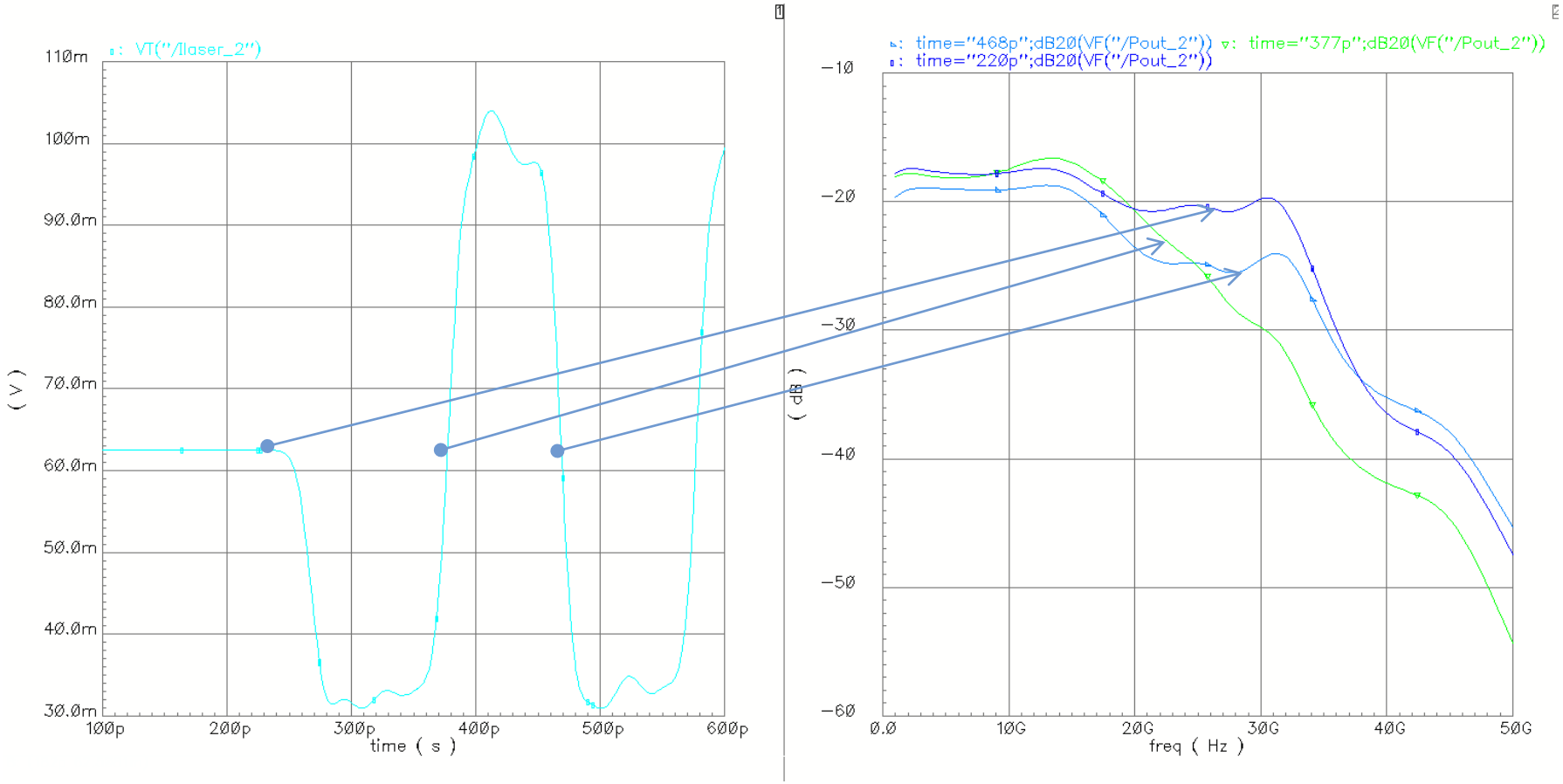

© 2014 Finisar Corporation Confidential

Laser Large-Signal

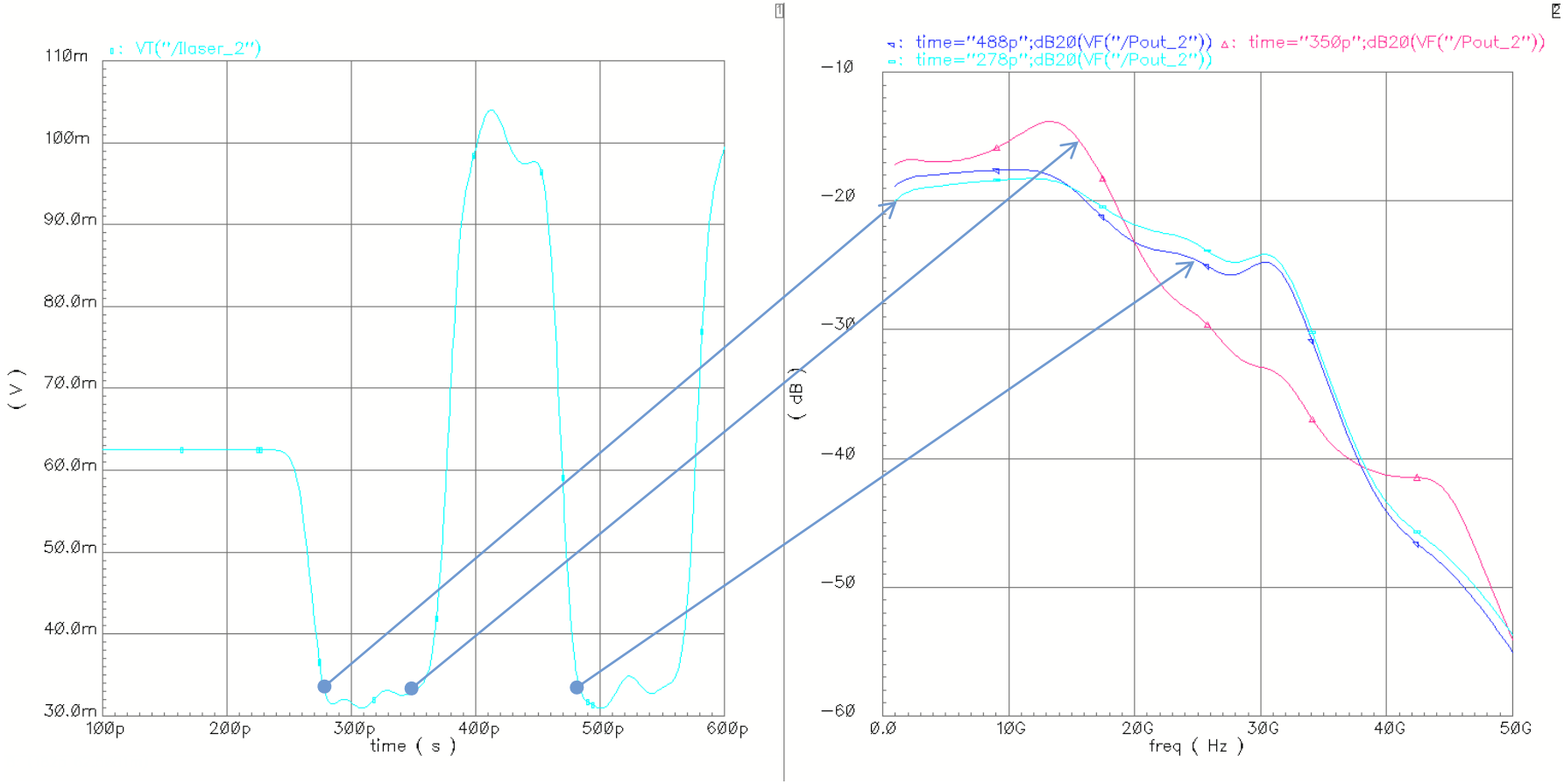

- Nonlinear behavior makes designs of DML driver very difficult at high speed
- Requires nonlinear compensations

© 2014 Finisar Corporation Confidential

Laser Driver Design

- Two main topologies: AC and DC-coupled

	PROS	CONS
AC	More headroom Off-chip compensations is possible Less heat load on laser	Higher power consumption Challenging signal integrity issue at higher speed Difficult to integrate capacitor → lower port density Large current loop → careful design for low EMI
DC	Lower power consumption Good signal integrity at high speed Suitable for integration → higher port density Small current loop → low EMI relatively easy to achieve	More accurate modeling required up front since no chance of off-chip compensation Lower headroom Heat load on laser

© 2014 Finisar Corporation Confidential

Laser Driver Current Draw

- AC-coupled
  - Drawn single-ended but can be applied to differential

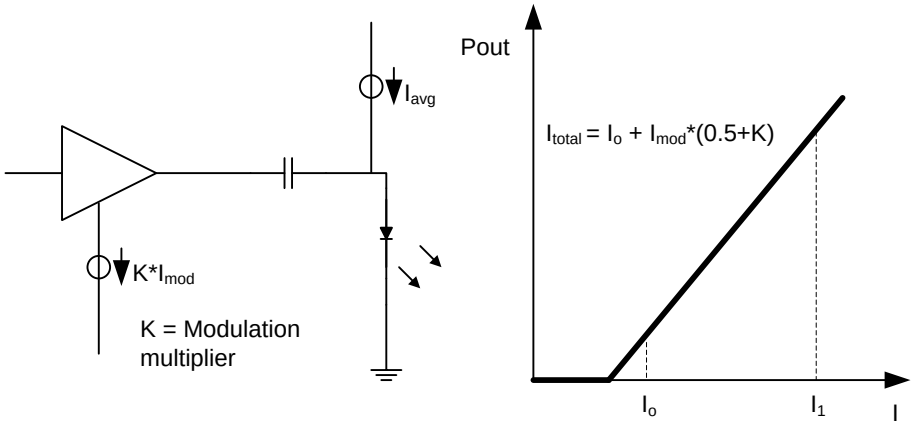

- DC-coupled – Class A Cathode Drive

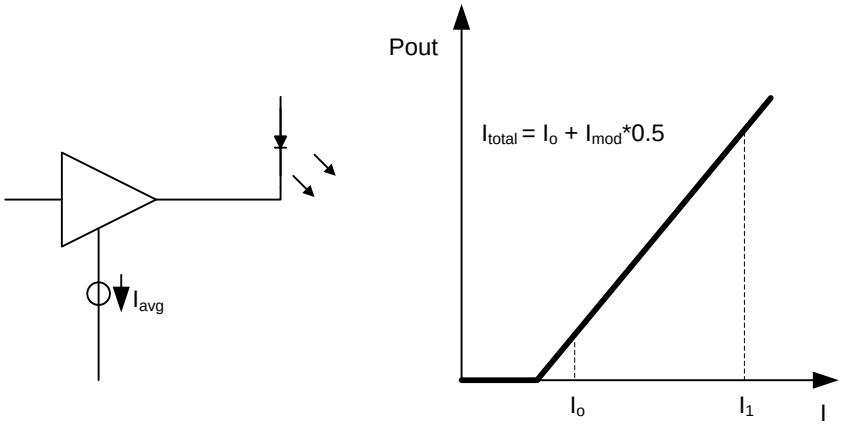

© 2014 Finisar Corporation Confidential

Laser Driver Current Draw

- DC-coupled – Diff Pair Cathode Drive

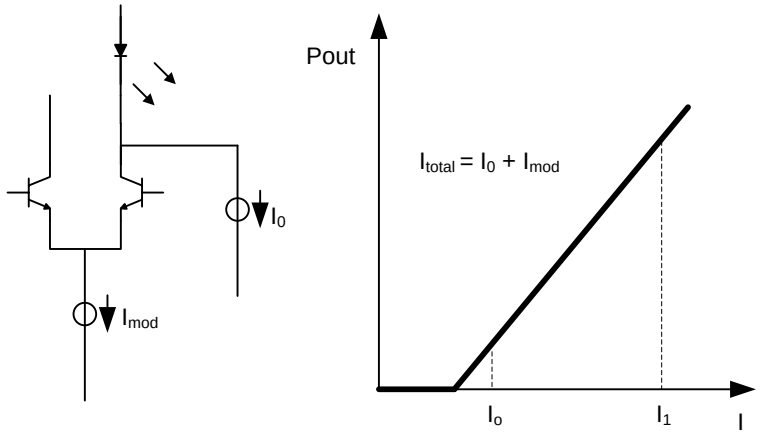

- DC-coupled – Diff Pair Anode Drive

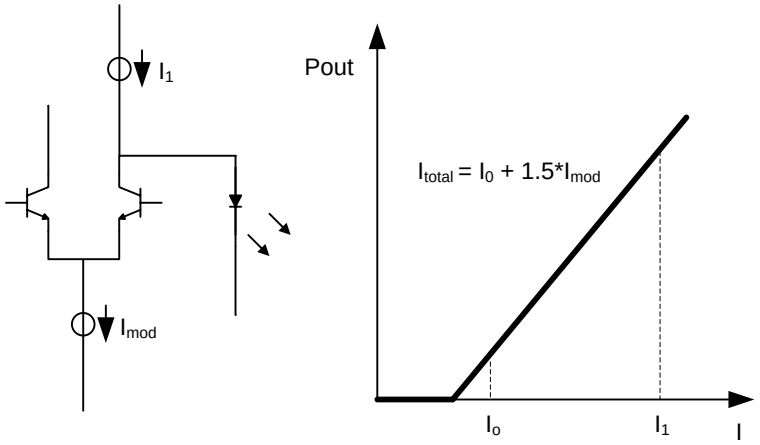

© 2014 Finisar Corporation Confidential

Laser Driver Current Draw

- Ranking of current efficiency
  1. DC-coupled – Class A Cathode Drive
  2. DC-coupled – Diff Pair Cathode Drive
  3. DC-coupled – Diff Pair Anode Drive
  4. AC-coupled → Equals to 3 with K=1 (100% efficient)
- Head-room can be problematic for dc-coupled depending on laser forward bias voltage → current efficiency advantage may be offset by higher required supply voltage

© 2014 Finisar Corporation Confidential

Receiver Design Challenges

- Receiver sensitivity is still an important specification ← design issues discussed in previous segment
- At higher speed increased TIA sensitivity will open up usable transmitter window → higher yield

Link budget from 1-10G for 850nm VCSEL over OM2 MMF

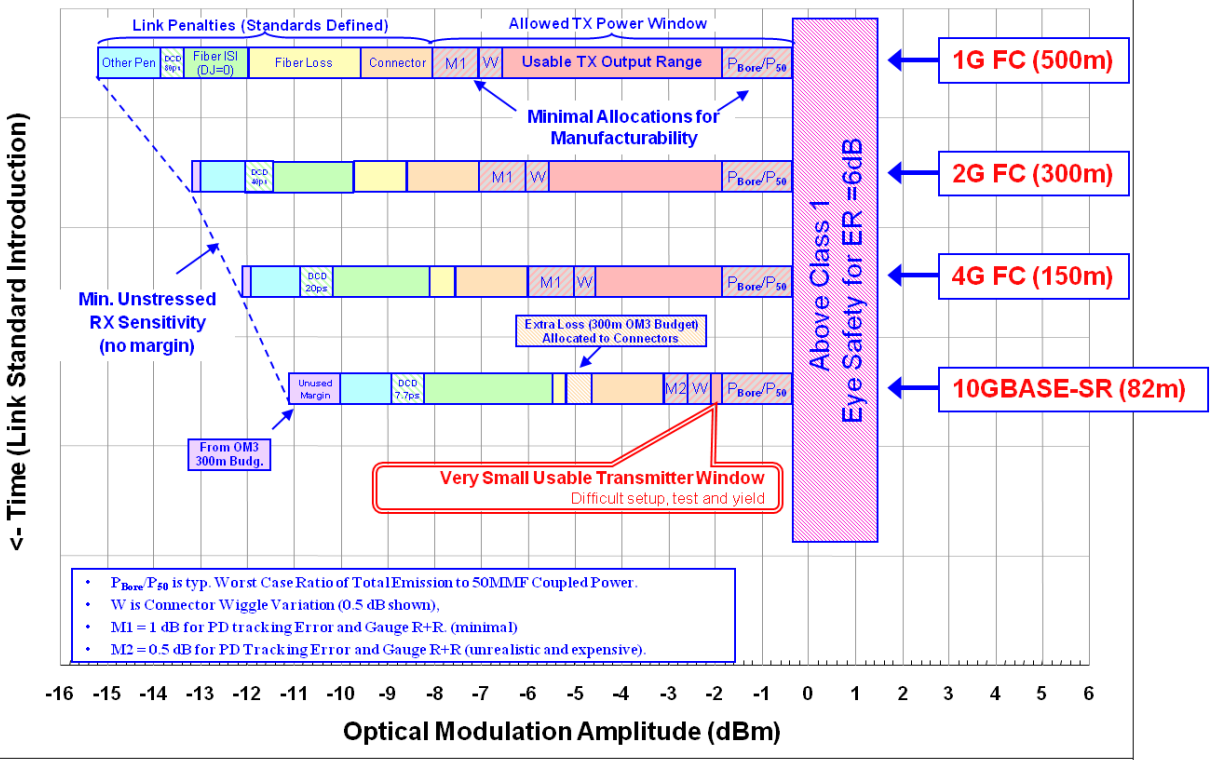

From Lew Aronson, Finisar

© 2014 Finisar Corporation Confidential

Receiver Design Challenges

- Low-cost package not optimal for reducing inductance BUT stability needs to be guaranteed

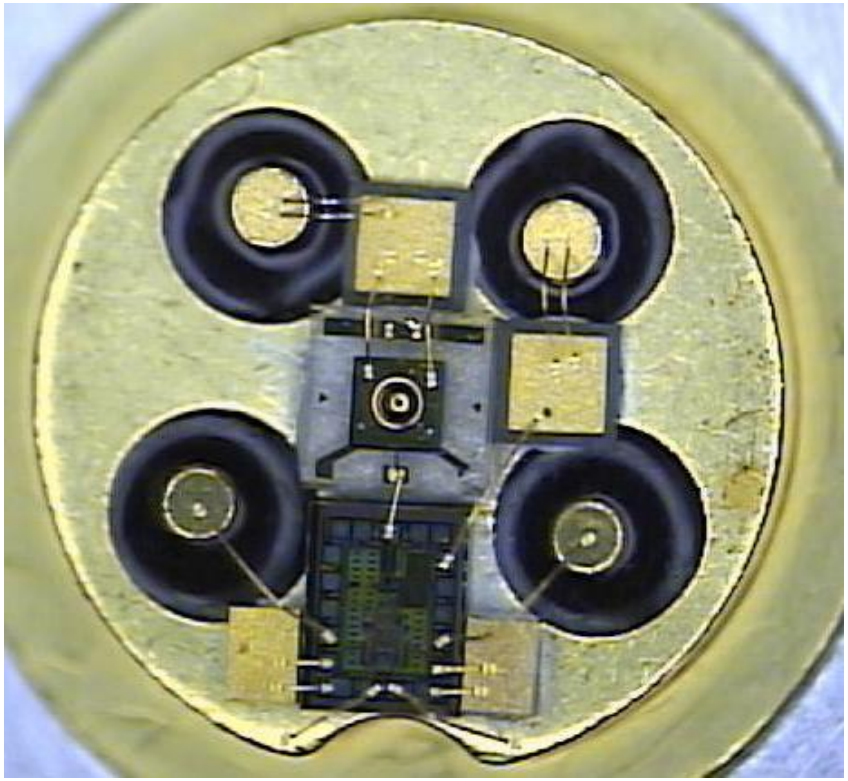

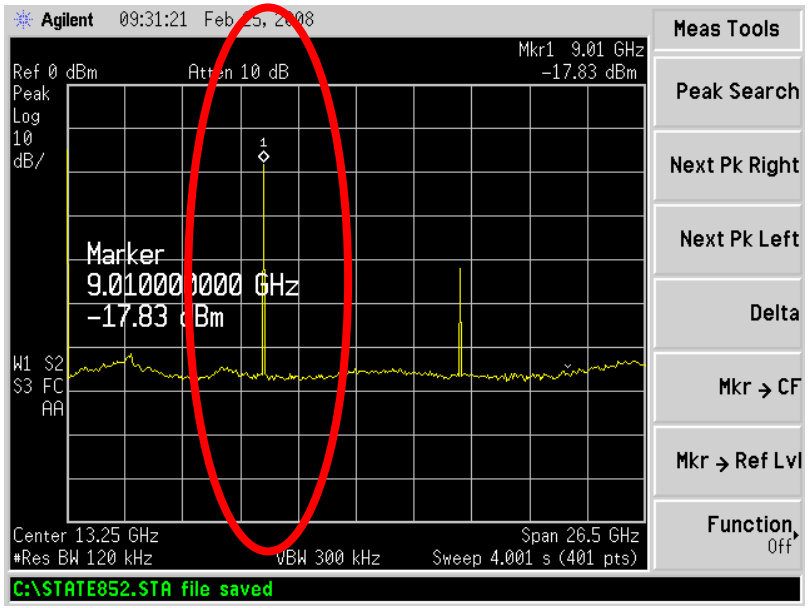

Common mode oscillation

© 2014 Finisar Corporation Confidential

Receiver Design Challenges

- Bootstrapping decoupling capacitance

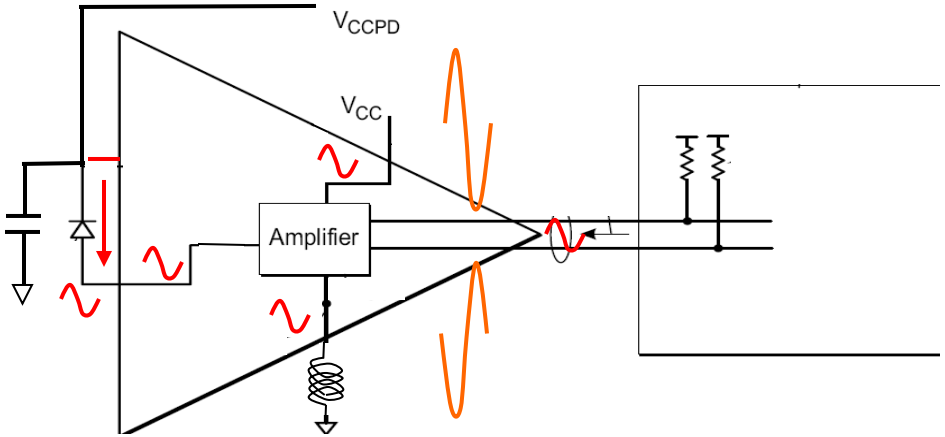

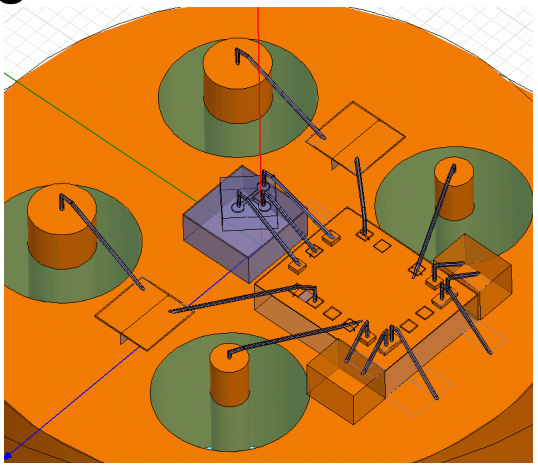

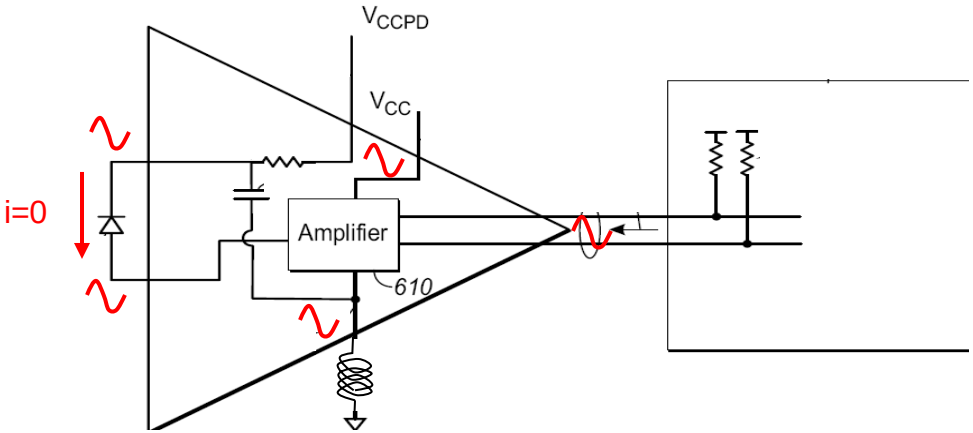

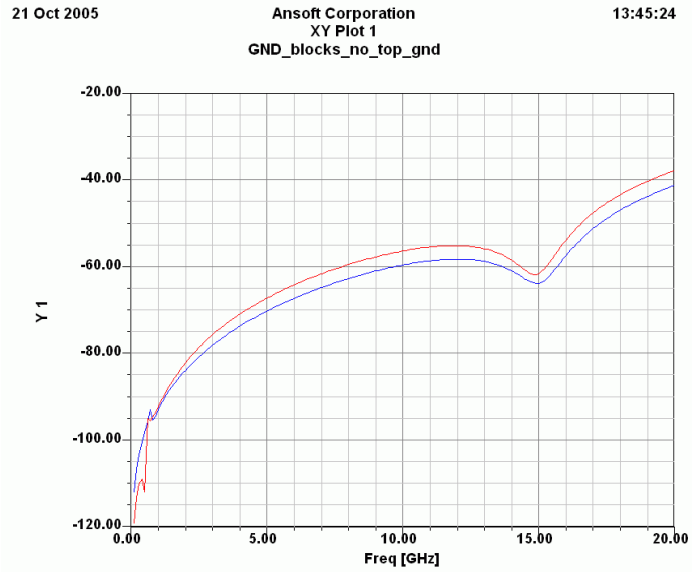

© 2014 Finisar Corporation Confidential

DC-Nulling and Overload

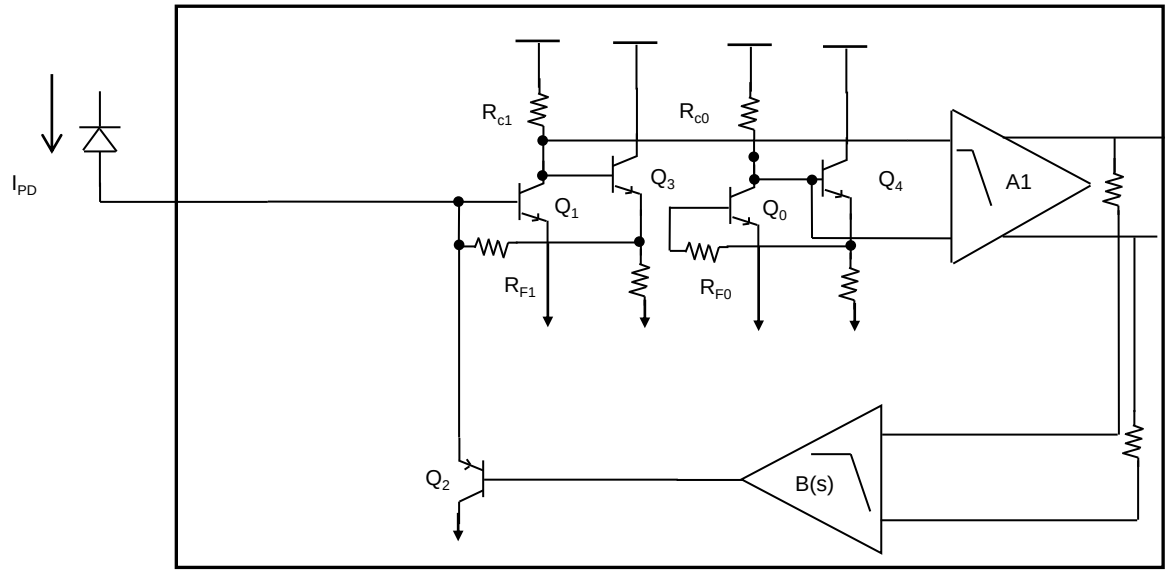

- Requirement for high gain and differential output → dc offset in the single-end to differential conversion stage as a function of average optical power
- Q2 also acts as low impedance to shunt ac optical signal → reducing gain thus preventing Q1 from entering cut-off or saturation which could lead to bit-error at high optical power
- Feedback loop must maintain adequately low bandwidth to prevent tracking out the input signal itself

© 2014 Finisar Corporation Confidential

CDR Design Considerations

- Low cost → reference-less CDR
- Enable retiming function to fit inside very small-form factor modules → compact and low-power
- For FEC applications → Recover lock at BER>1e-3
  - Very difficult to do in absence of reference clock
  - Key enabling technology and thus lots trade secrets and patent protection
  - Will not be addressed in this course

© 2014 Finisar Corporation Confidential

Reference-less CDR

- Block diagram

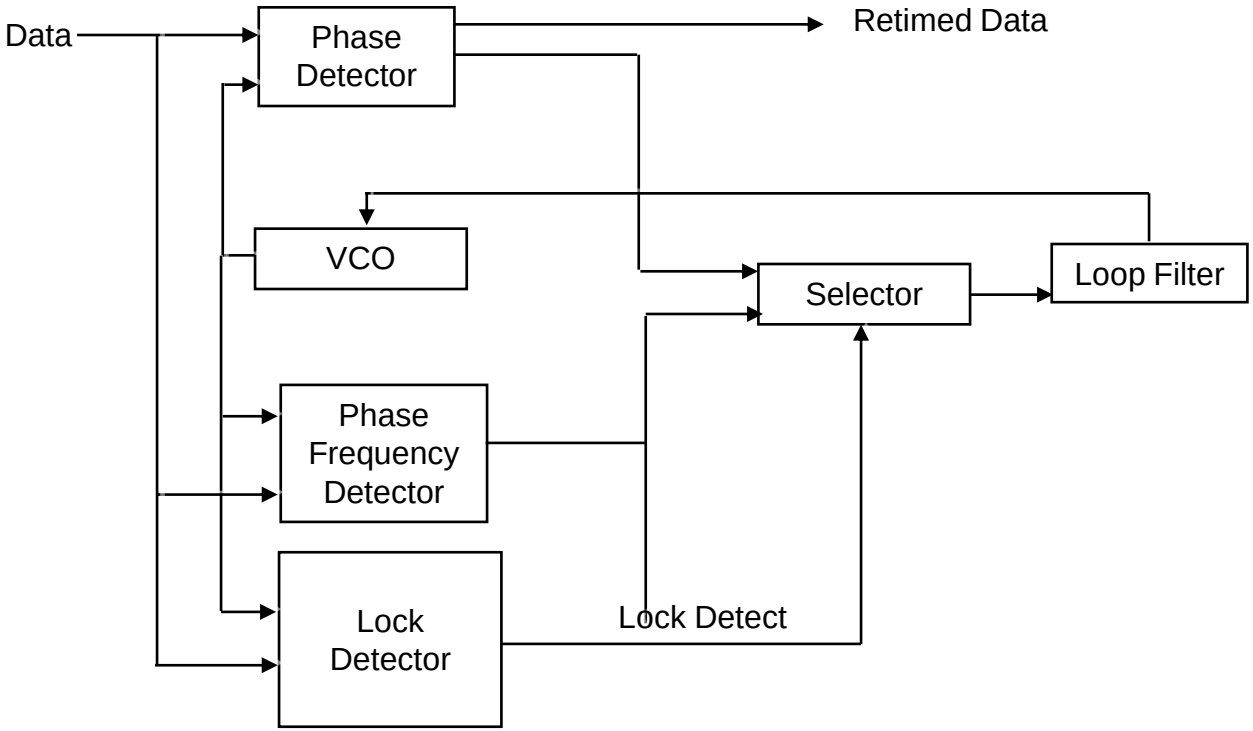

- PFD can be turned off after acquiring to save power
- Lock detect must remain on for loss-of-lock detection → optimized for low power

© 2014 Finisar Corporation Confidential

Phase-Frequency Detector

- Example – PFD operation based on Pottbacker
- Data samples both I and Q-clock using both edges
- Pull-in range determined by VCO control range and by having at least 1 transition per ¼ beat period on average

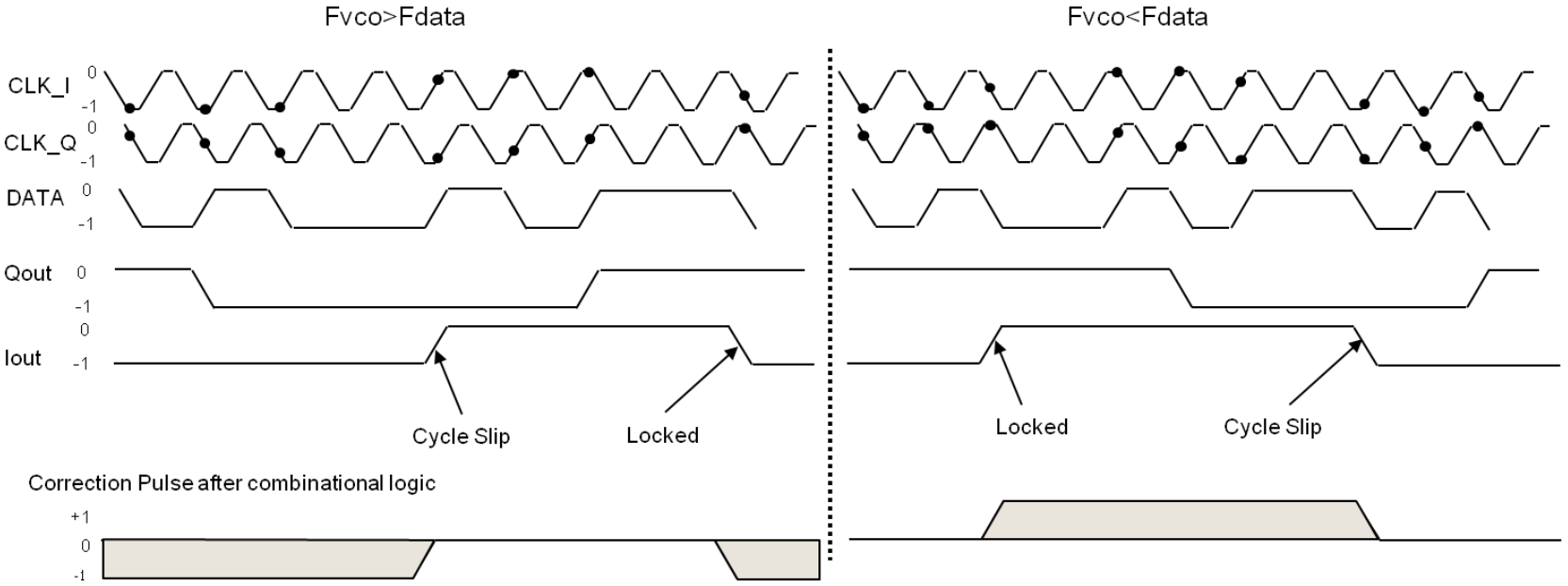

IEEE JOURNAL OF SOLID-STATE CIRCUITS, VOL. 27, NO. 12, DECEMBER 1992

A Si Bipolar Phase and Frequency Detector IC for Clock Extraction up to 8 Gb/s

Ansgar Pottbäcker, Ulrich Langmann, *Member, IEEE*, and Hans-Ulrich Schreiber

© 2014 Finisar Corporation Confidential

40G and 100G Ecosystem

10G Modules

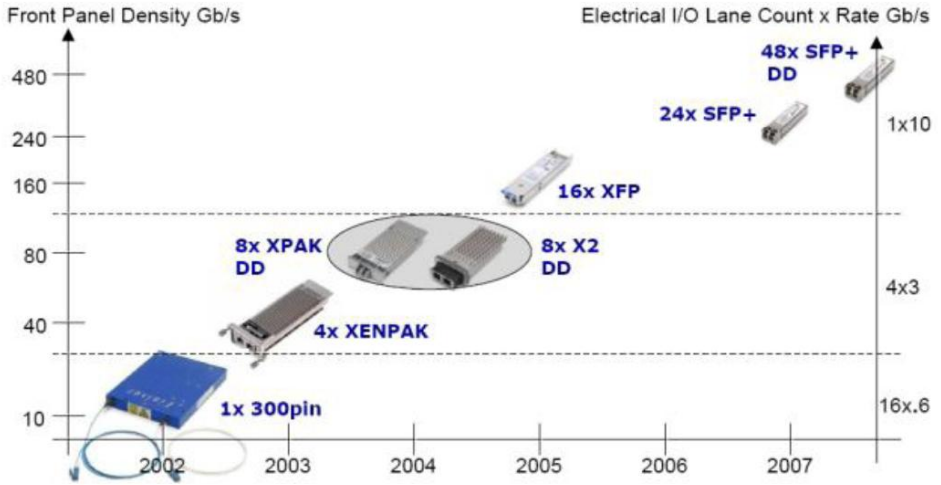

100G Modules

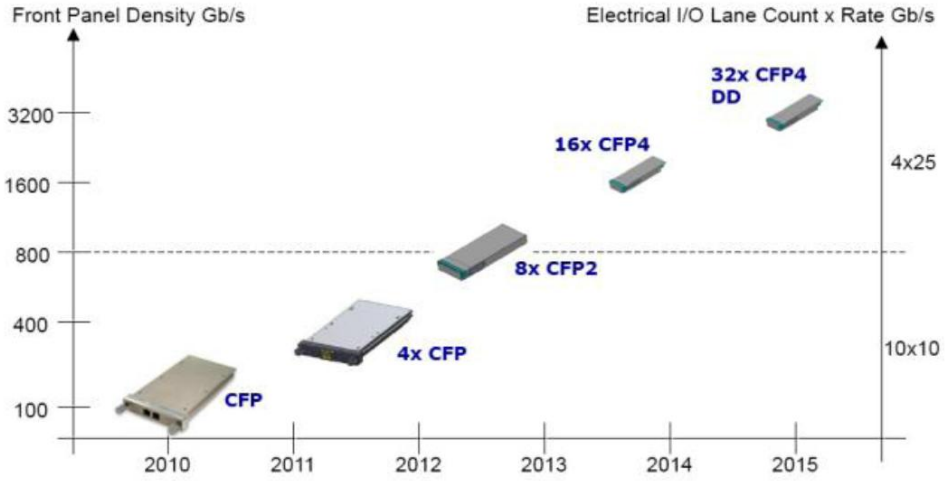

© 2014 Finisar Corporation Confidential

40G and 100G Ecosystem

- 100G Form factors: CFP, CFP2 and CFP4
- 40G also uses QSFP (slightly smaller than CFP4)
- 100G will also adopt QSFP28 (electrical connector change)

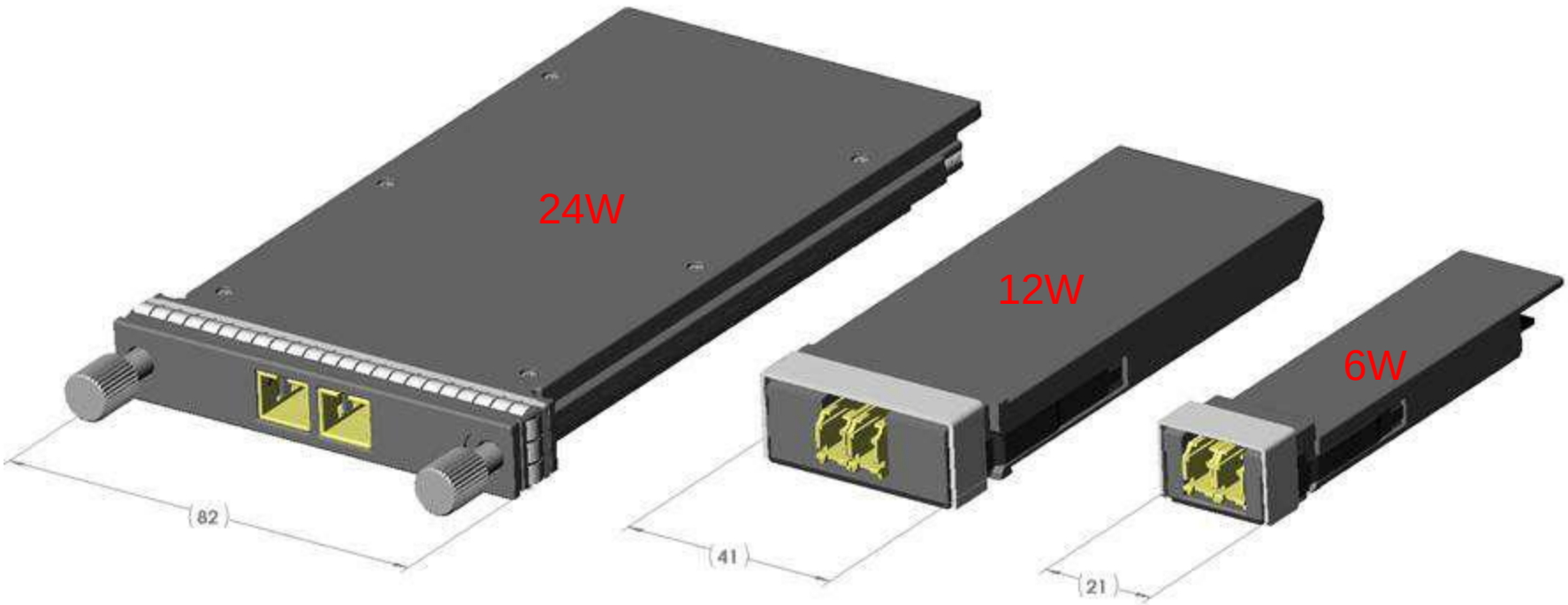

© 2014 Finisar Corporation Confidential

40G and 100G Applications

- 40G SW parallel – 4x10G
- 100G SW parallel – 10x10G
- 40G LW WDM – 4x10G
- 40G LW Serial – 40G
- 100G LW WDM – 10x10G and 4x25G
- 100G LW Parallel – Emerging and being defined
- See Appendix 2 for more details on Applications Block Diagrams

© 2014 Finisar Corporation Confidential

Beyond 100G

- Electrical interface development

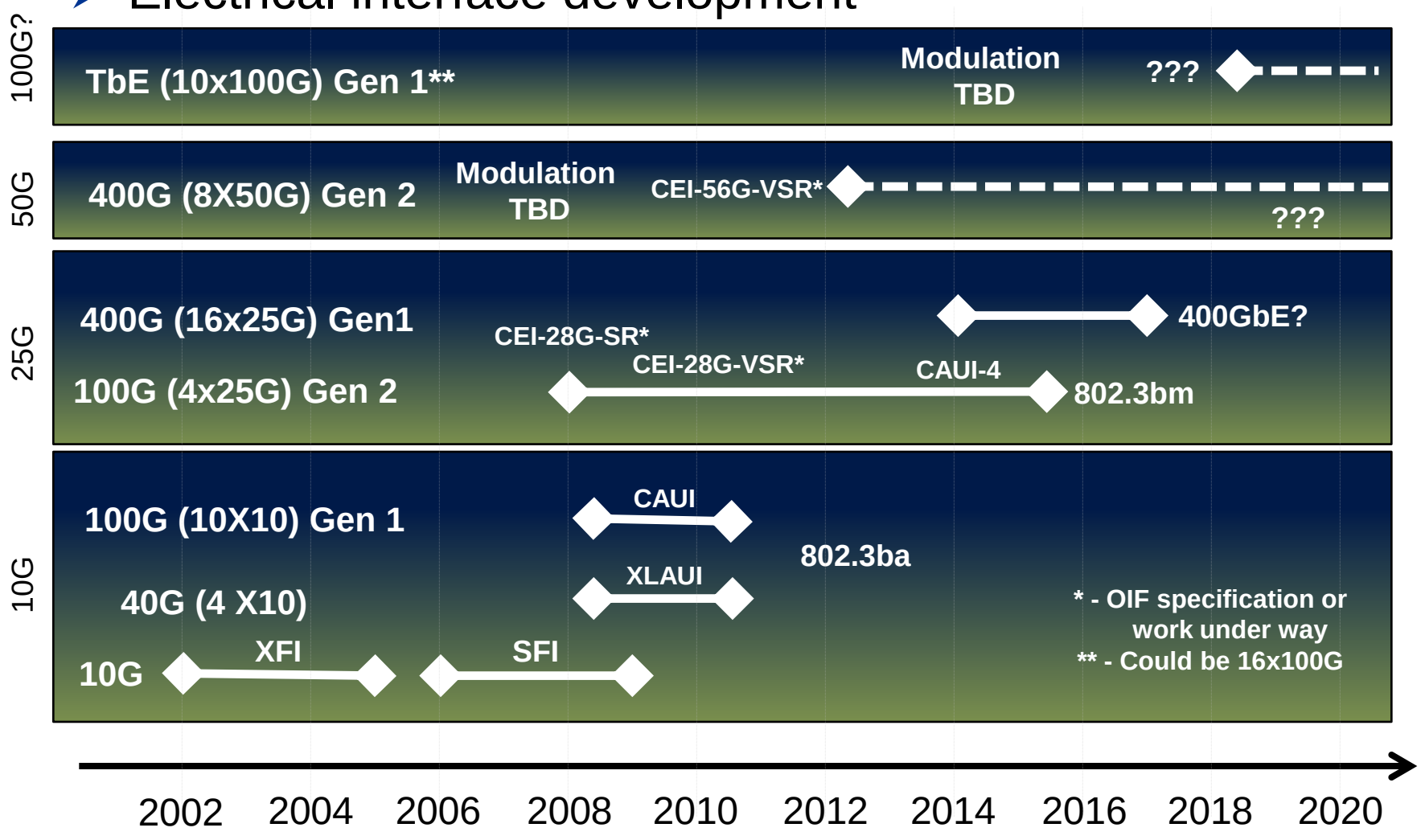

© 2014 Finisar Corporation Confidential

First Step – 400G

- Requirements from end users
  - Provide meaningful data rate increase
  - Maintain parity with 100GE bit/sec cost
- Requirements from developers
  - Leverage 100GE R&D investment
  - Leverage ramping 100GE product volumes
- Next data rate products should be based on 100GE technology to control R&D and unit costs
- 400GE meets these requirements
- Technology for data rates above 400GE (ex. 1TE) requires extensive R&D and does not exist today

© 2014 Finisar Corporation Confidential

400G Shortwave Parallel

- 400G interfaces
- Module form factor TBD

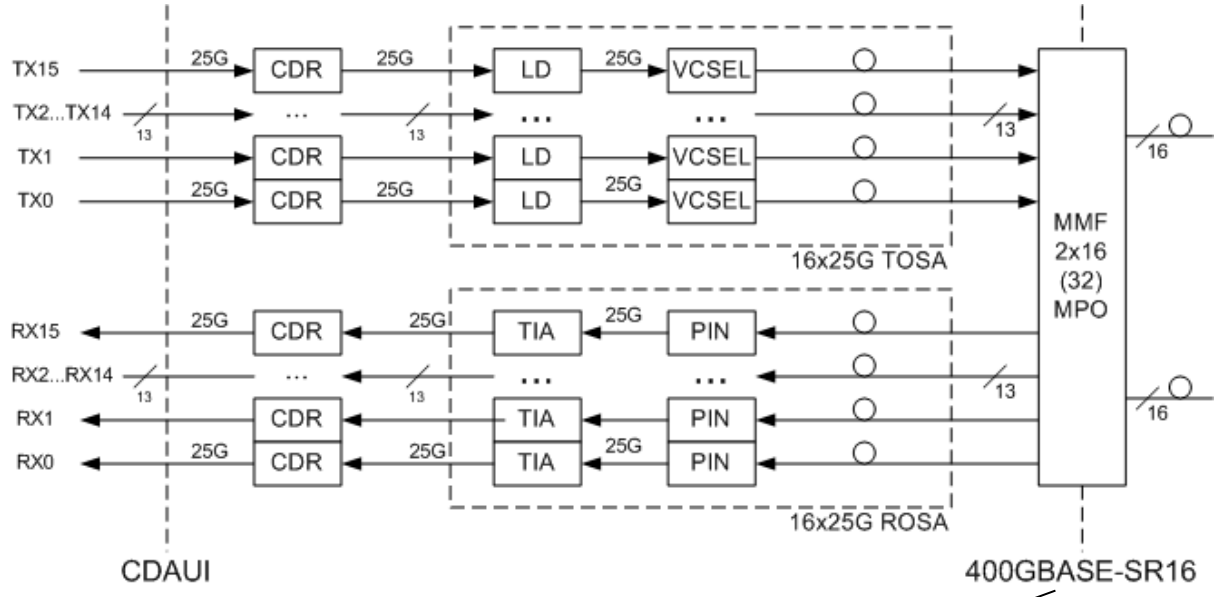

2 x 16 MMF MT ferrule

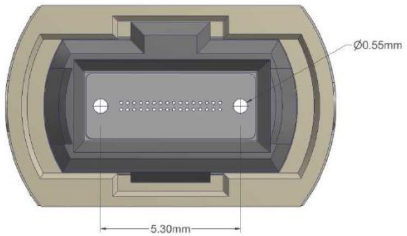

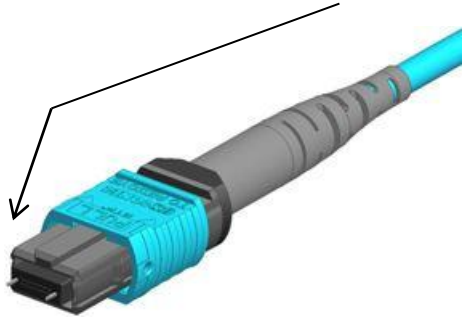

© 2014 Finisar Corporation Confidential

400G Longwave WDM

- 400G interfaces
- Gen 1 – 4xCFP4 and 4xQSFP28

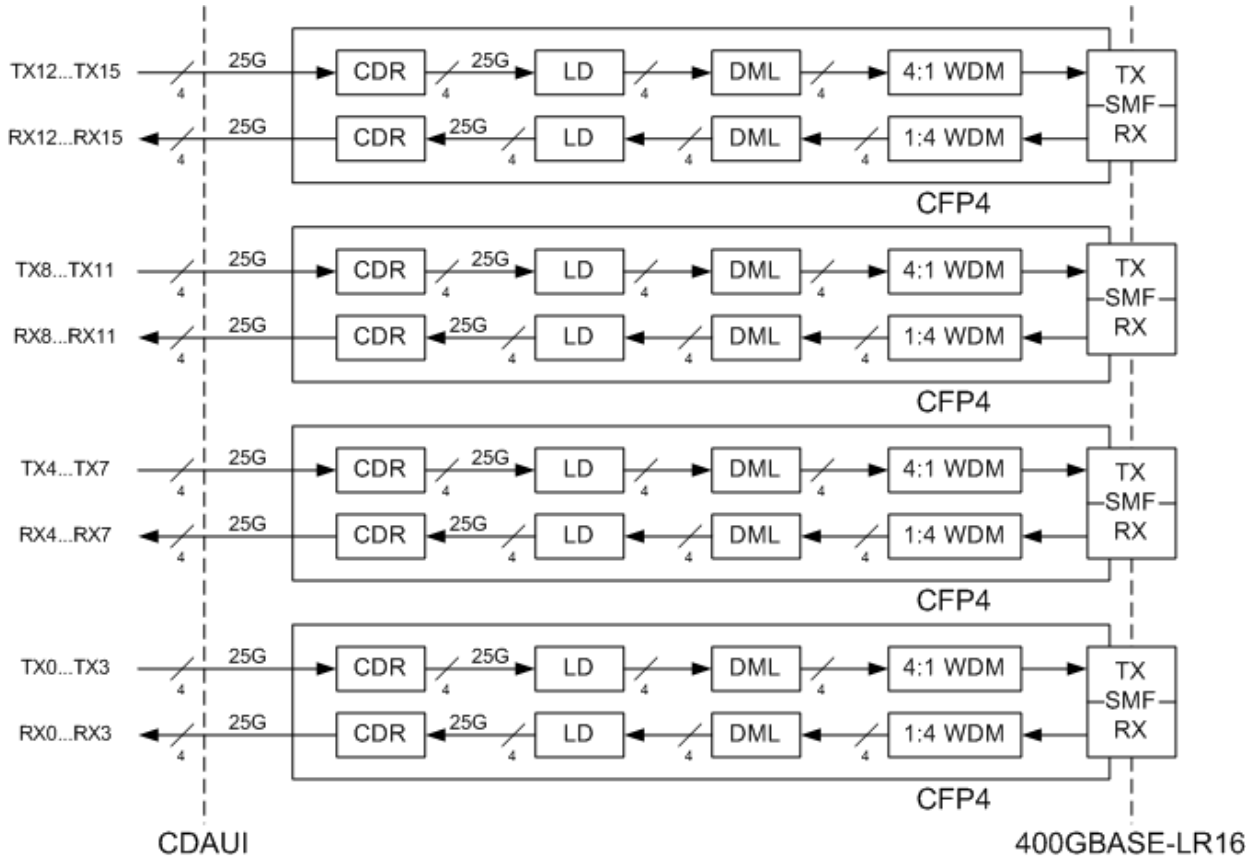

© 2014 Finisar Corporation Confidential

400G Longwave WDM

- 400G interfaces
- Gen 2 – CFP2 400G-LR8

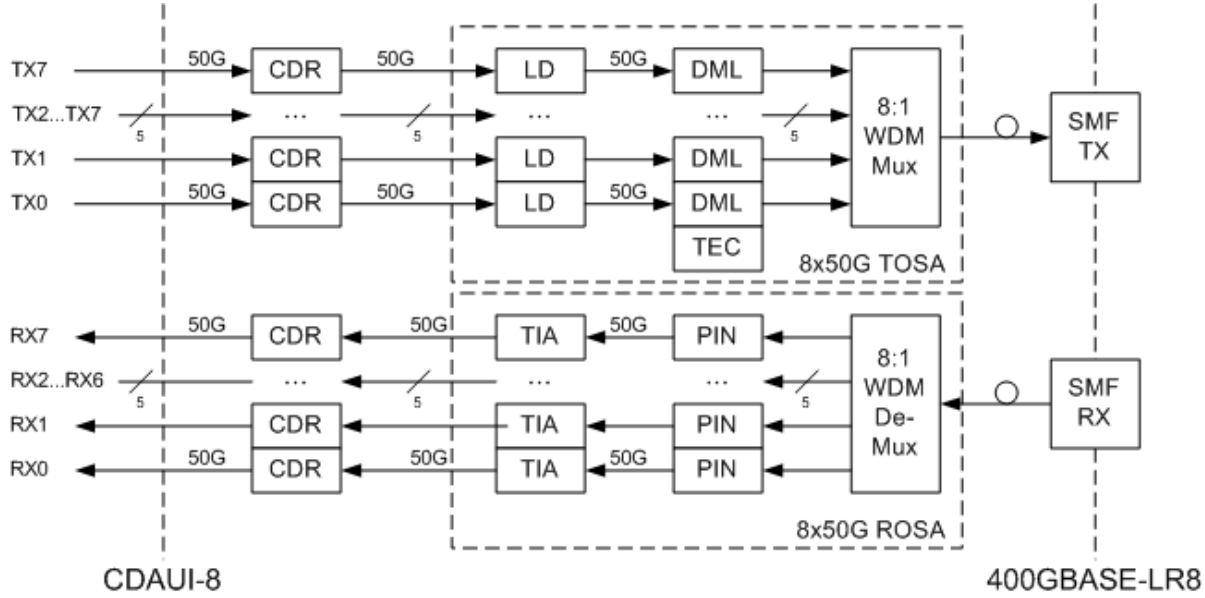

- Alternative to 400G-LR8 – LR4 WDM with 4λs using higher order modulation for 100G on single λ

© 2014 Finisar Corporation Confidential

HOM – Discrete Multitone (DMT)

- Using 25Gb/s DFB laser
- 6-b ENOB DAC/ADC at 60GS/s
- 4-5Mgates
- Less than 5W at 28-nm CMOS node

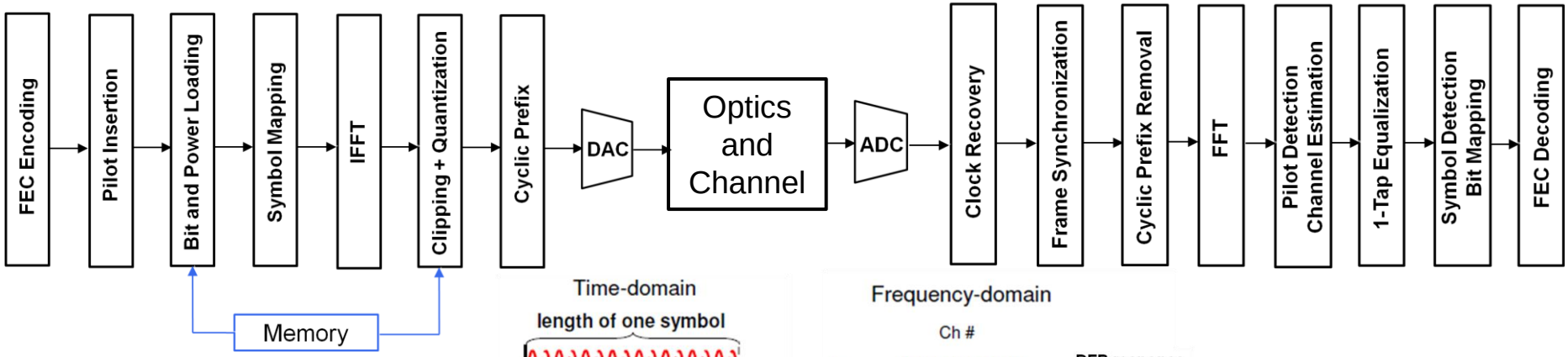

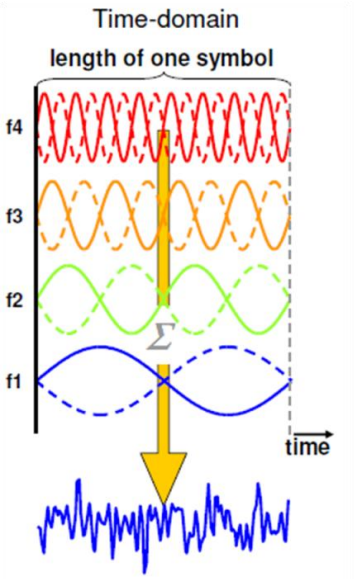

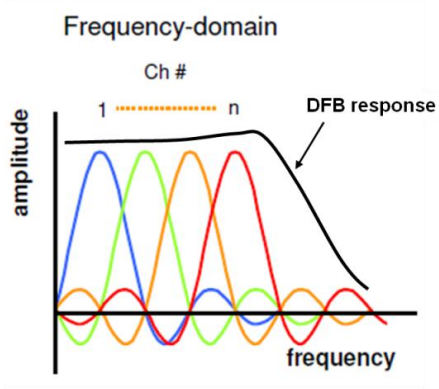

Each subcarrier samples only a small portion of DFB frequency response

⇒ Very resilient to amplitude and phase ripples

Ilya Lyubomirsky

OIDA Photonic Integration Workshop

June 21, 2012

© 2014 Finisar Corporation Confidential

HOM – Discrete Multitone (DMT)

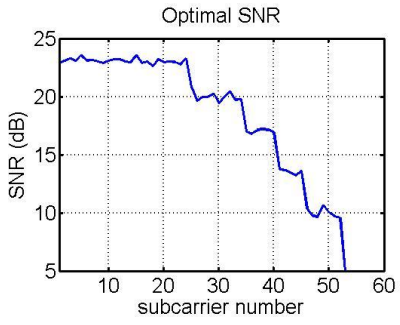

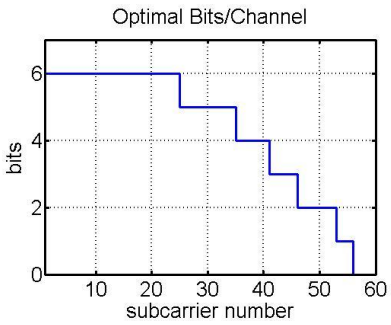

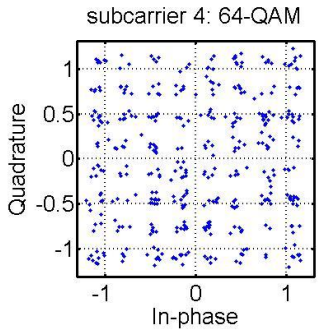

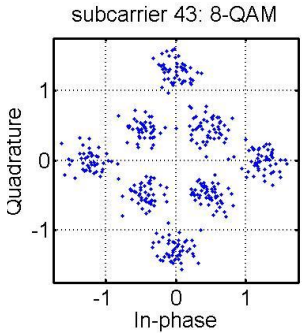

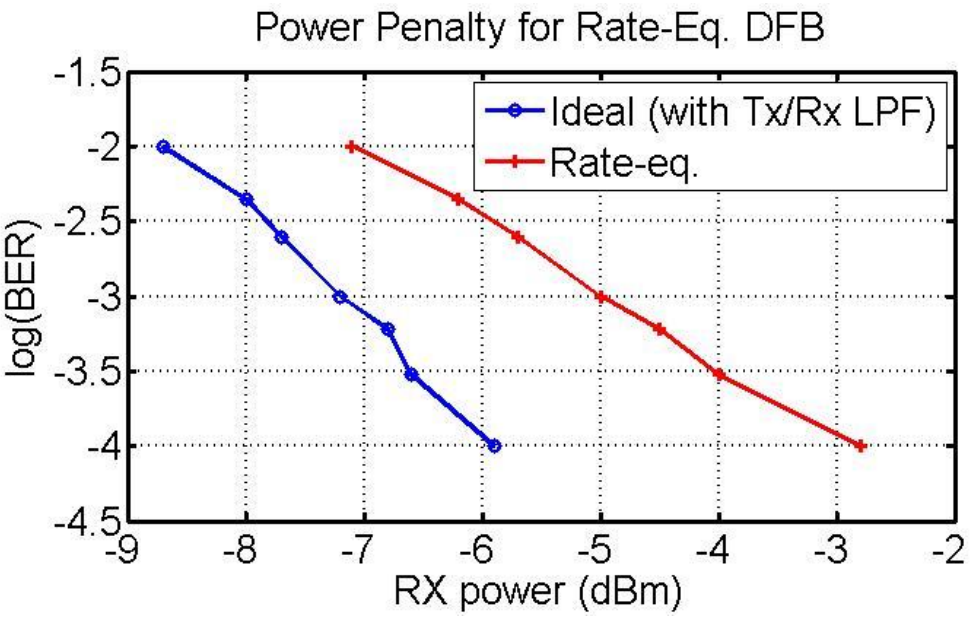

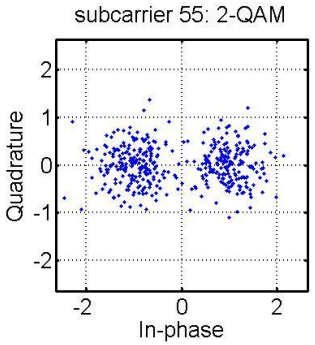

- Laser nonlinearity → 2dB penalty. MZM should yield better performance

© 2014 Finisar Corporation Confidential

HOM – PAM-N

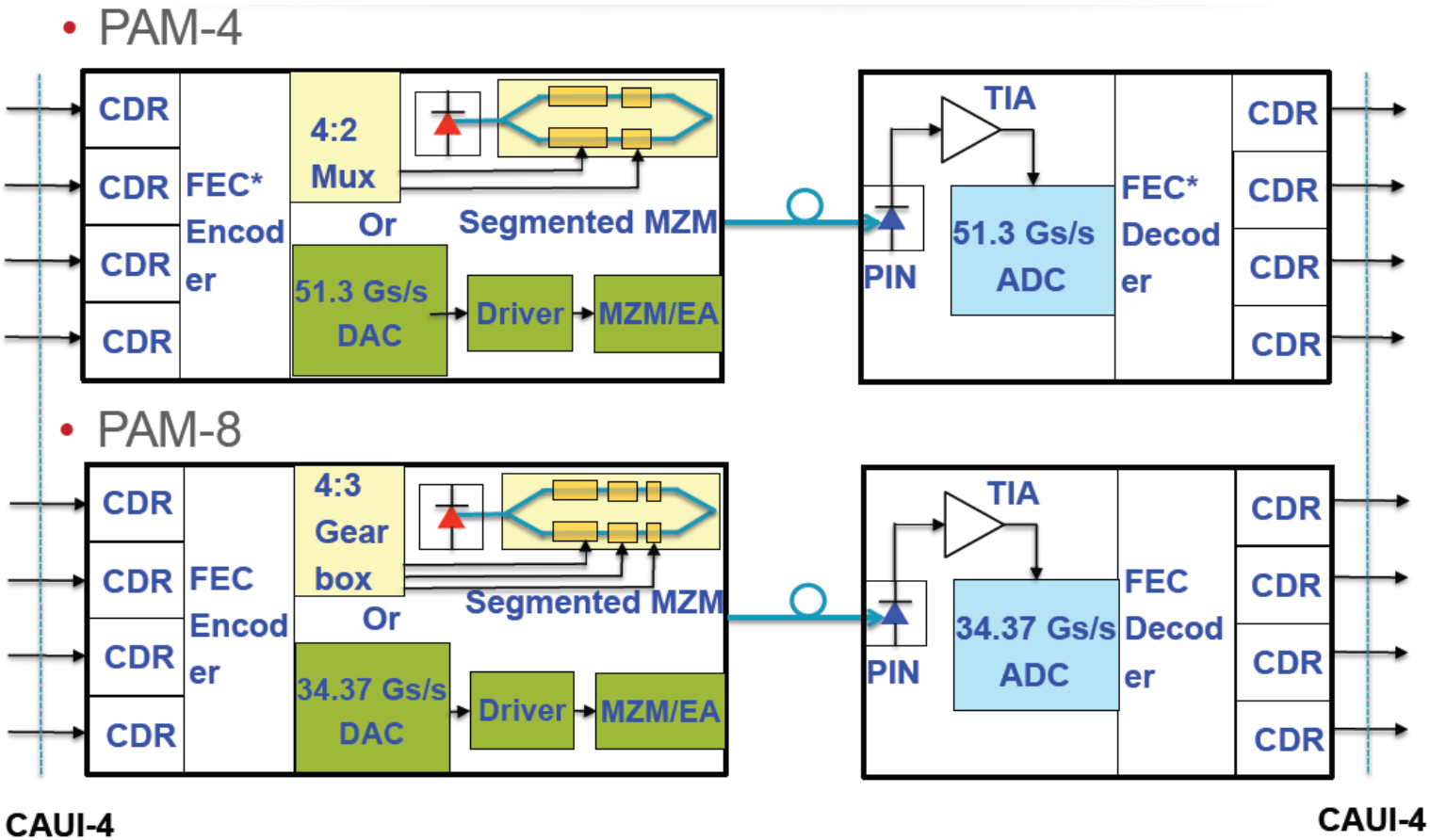

* BJ FEC maybe sufficient for PAM-4

- Using segmented MZM driven with NRZ at baud rate

Investigation of 100GbE Based on PAM-4 and PAM-8
IEEE 802.3bm Task Force

Ali Ghiasi - Broadcom Brian Welch – Luxtera

© 2014 Finisar Corporation Confidential

≥ 1Tb/s

- **1Tb/s Ethernet**
  - Has been extensively discussed
  - Vestige of 10x historical Ethernet speed jumps
  - Will require huge R&D investment
  - 2.5x speed increase from 400G is not compelling
- **1.6Tb/s Ethernet**
  - 4x speed increase reasonable return on R&D $
  - 4x is more likely for future speed increases
  - Similar to historical 4x Transport speed jumps
  - Gen1 can use 4xGen2 400G architecture

© 2014 Finisar Corporation Confidential

Outline

- Overview of the Optical Market
- Telecom Optics
- Datacom Optics
- Parallel Optics And Silicon Photonics

© 2014 Finisar Corporation Confidential

Parallel Optics

- Economic drivers:
  - Power → Very crucial to meet extremely dense interconnect
  - Cost → High yield is very critical to meet cost target. Packaging and low-cost optical alignment are important
  - Reach (2-20m) → Intra-rack and intra-server interconnects
- Many form factors not driven by MSA's but by applications

© 2014 Finisar Corporation Confidential

Parallel Optics

- Link length distribution moving to longer length then shorter

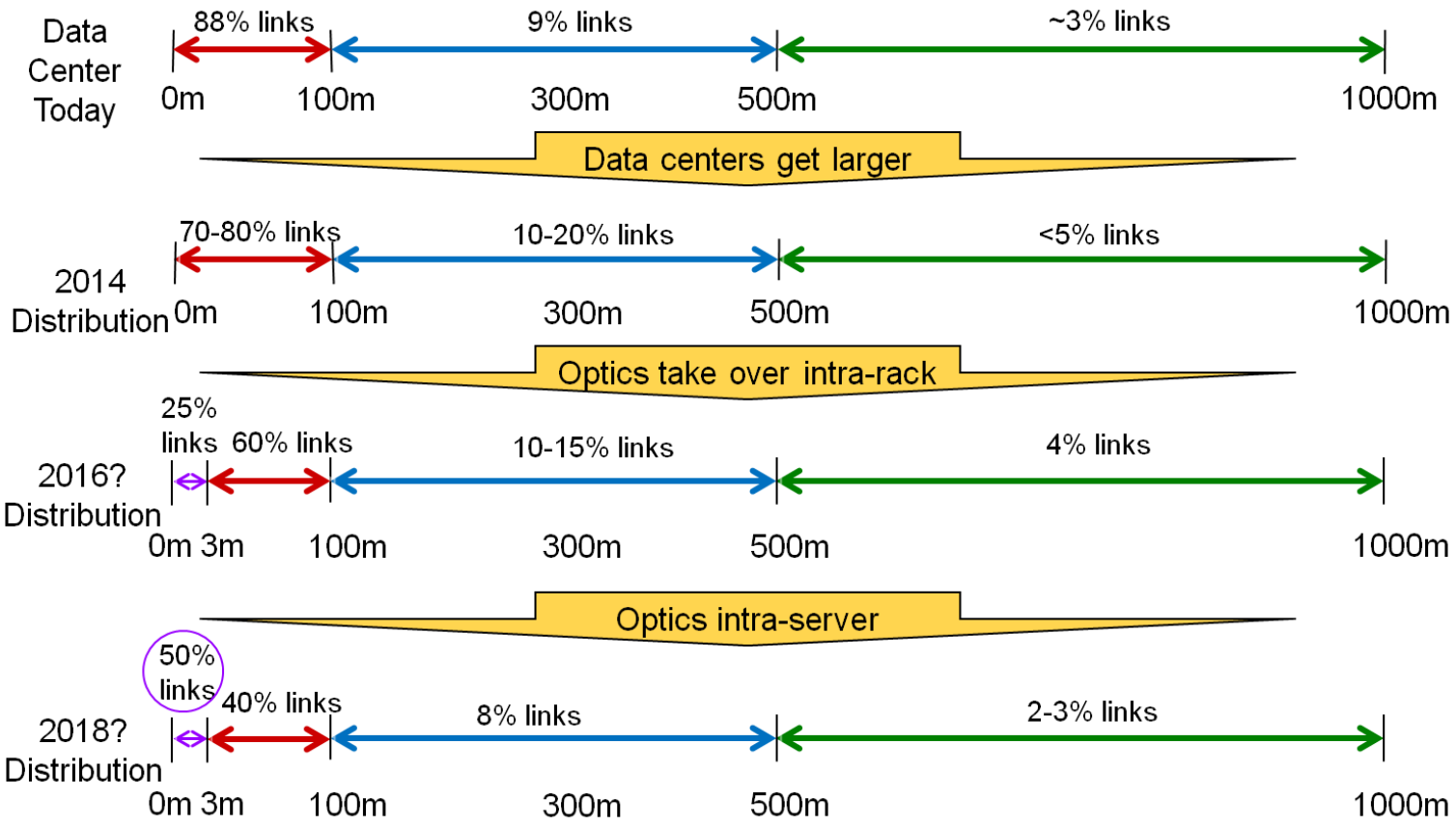

© 2014 Finisar Corporation Confidential

Drivers of Parallel Optics

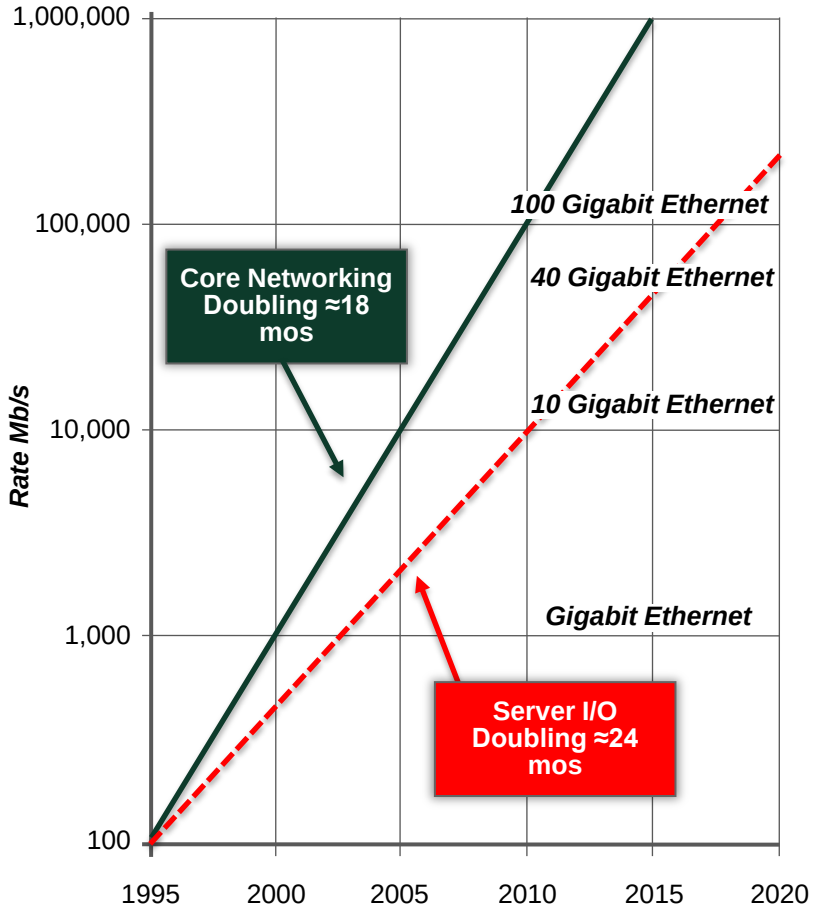

- Server Upgrade Path
  - 2014: 40 GbE
  - 2017: 100 GbE
- Blade Servers
  - 802.3ba: 10 GbE to 40 GbE
  - 802.3bj: 40 GbE to 100 GbE
- Other Future Server I/Os
  - 40GBASE-T
  - 100GbE over MMF

© 2014 Finisar Corporation Confidential

Drivers of Parallel Optics

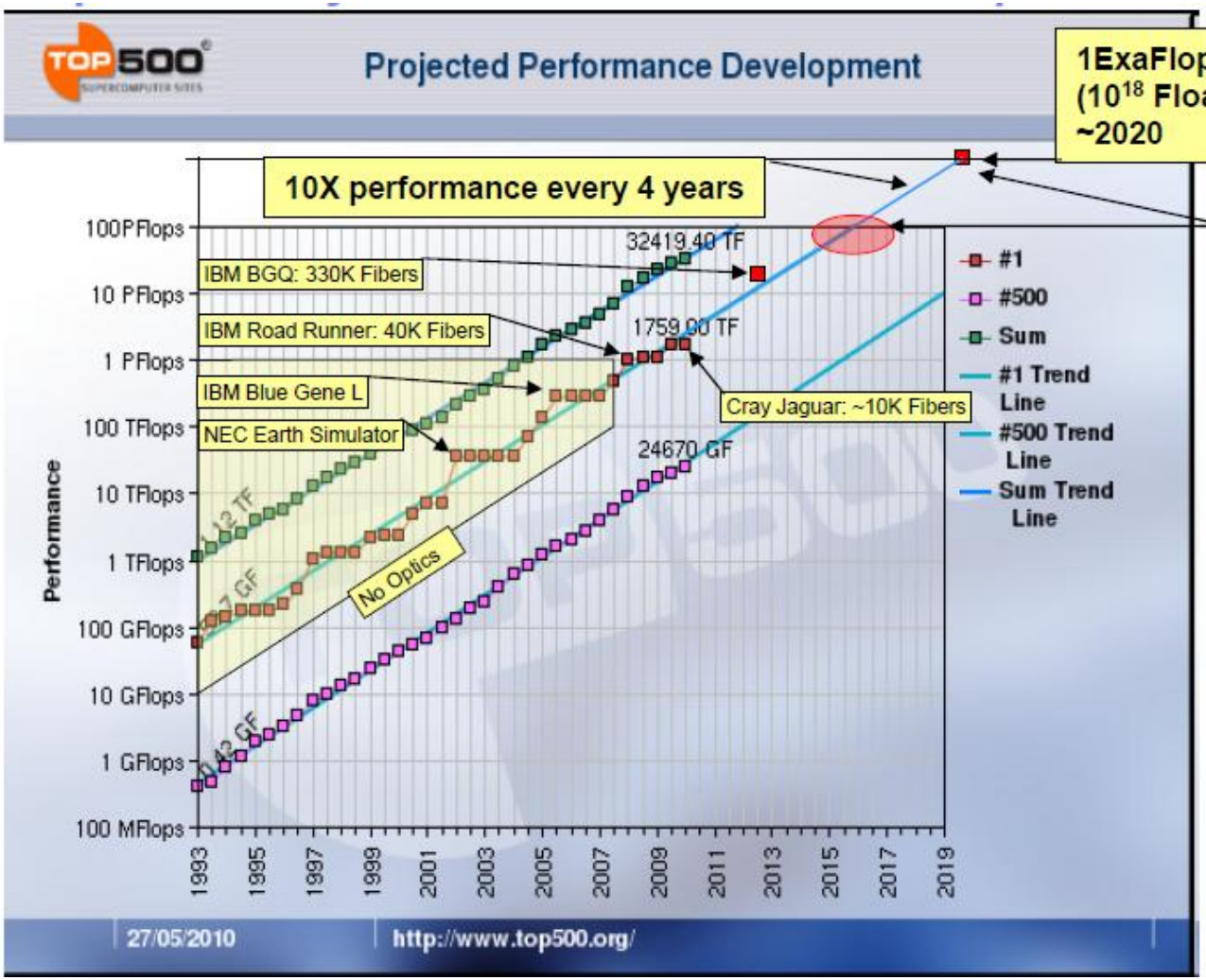

100PF Machine w/ 3M Fibers?
1EF Machine with 30M Fibers???

Doesn't seem practical, nor cost effective to increase the number of fibers in the system by 10x every 4 years

From SPRC 2012 by Dan Kuchta, IBM

© 2014 Finisar Corporation Confidential

Emerging Form Factors

- 10G
  - SFP+ has won in the data center

- 40G/56G
  - 4x10G and 4x14G in the data center
  - QSFP+ has taken over from CFP (at 40G) and is here to stay until SFP++ takes over in ~5 years

- 100G
  - 4x25G, 10x10G
  - CFP/CFP2/CFP4 offers the an elegant roadmap to high density
  - QSFP28 is comparable to CFP4, but may not be able to handle the thermal loads associated with long reaches
  - CDFP – 16x25G and is similar to CXF

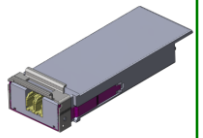

- Form factors that lend themselves well to incorporation into hardwired Active Optical Cables tend to thrive
- Board-mounted assemblies (a.k.a. “optical engines”) are replacing some pluggable optics for very high density

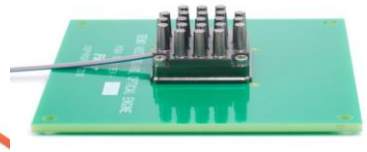

© 2014 Finisar Corporation Confidential

What Is Optical Engine?

- Board-mounted instead of conventional edge-mounted pluggable optics
- Land-grid array (LGA) and pressure contact to PCB landing pattern

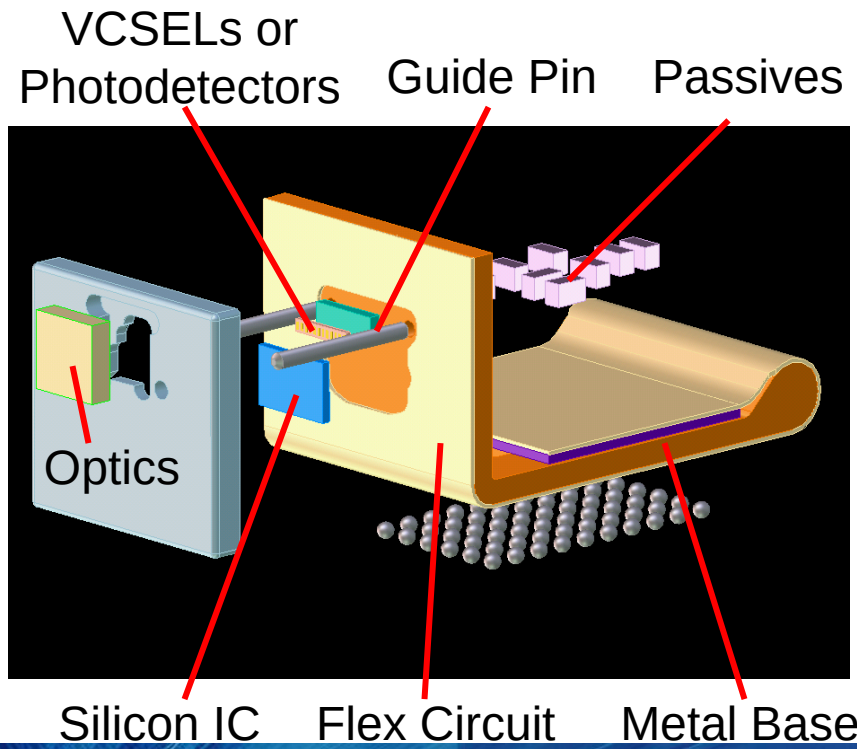

© 2014 Finisar Corporation Confidential

Ever Decreasing Pitch

- Channel pitch is becoming tighter
- Presently, MPO connector's fiber pitch is 250um → electrical crosstalk

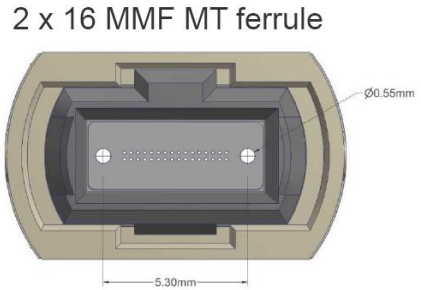

- Parallel fiber scaling running into practical limit → push toward multi-core fiber
- MCF has pitch in the range of 40um → optical crosstalk as well as electrical

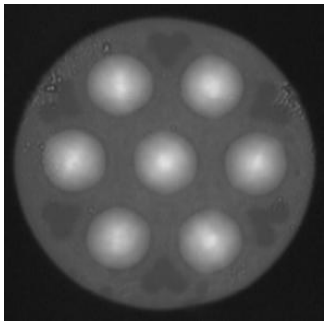

© 2014 Finisar Corporation Confidential

Mitigating Crosstalk

- Pseudo-differential TIA demonstrated in

ISSCC 2013 / SESSION 7 / OPTICAL TRANSCEIVERS

7.1 A Quad 25Gb/s 270mW TIA in 0.13µm BiCMOS with <0.15dB Crosstalk Penalty

Georgios Kalogerakis, Tim Moran, Thelinh Nguyen, Gilles Denoyer

Finisar, Sunnyvale, CA

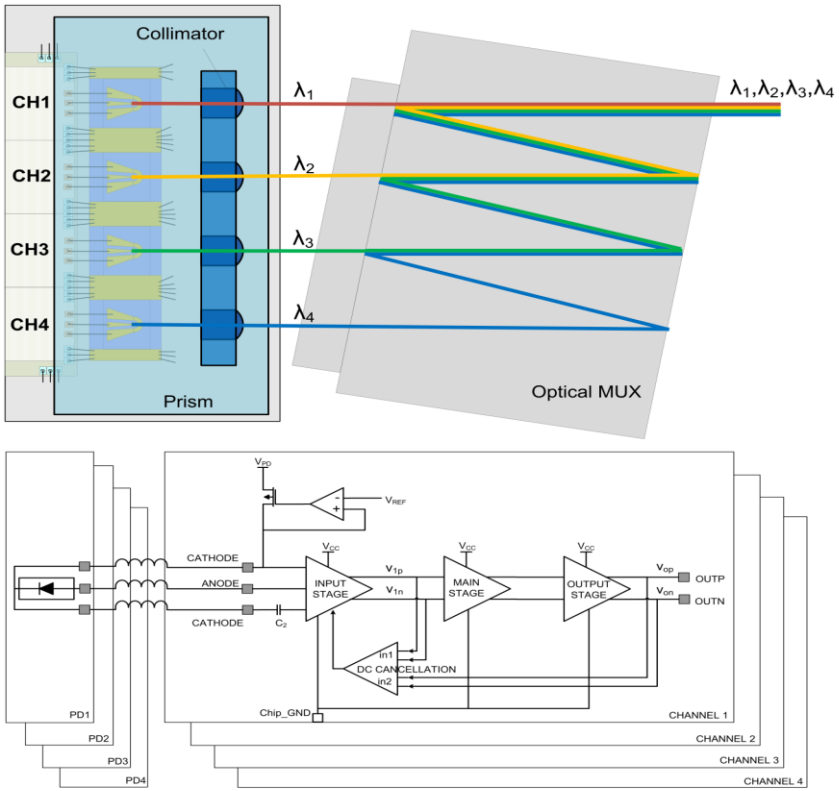

Mitigating Crosstalk

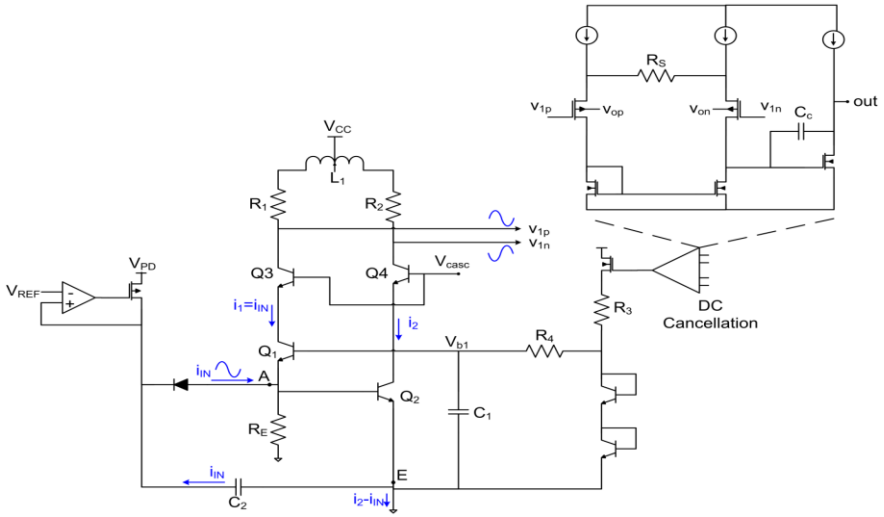

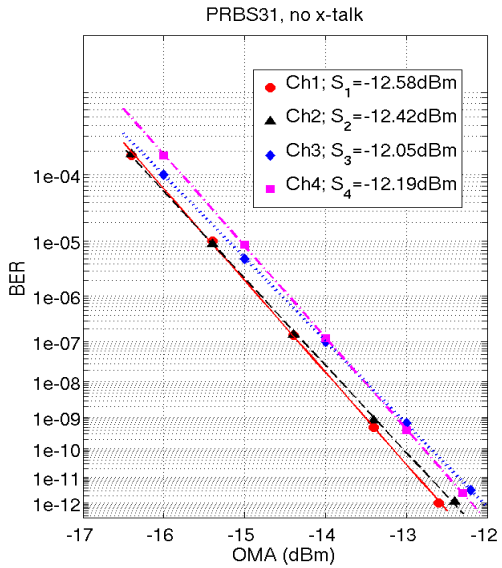

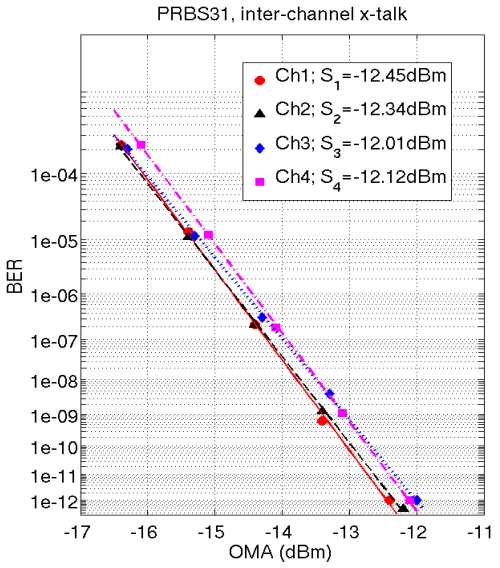

© 2014 Finisar Corporation Confidential

Reference-less CDR Going Digital

- Tight pitch, large-scale parallel channels and small form factor makes analog CDR with large external loop capacitor impractical

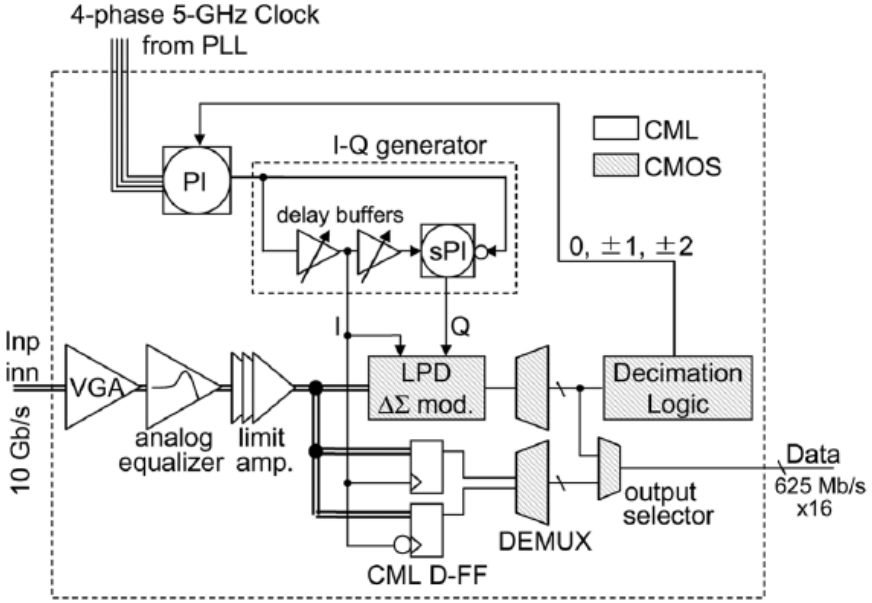

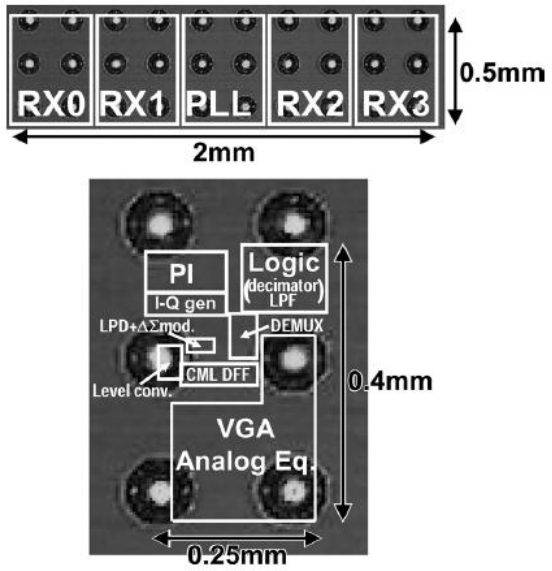

IEEE JOURNAL OF SOLID-STATE CIRCUITS, VOL. 44, NO. 12, DECEMBER 2009

A 10-Gb/s Receiver With Track-and-Hold-Type Linear Phase Detector and Charge-Redistribution First-Order ΔΣ Modulator in 90-nm CMOS

Koji Fukuda, *Member, IEEE*, Hiroki Yamashita, Fumio Yuki, Goichi Ono, Ryo Nemoto, Eiichi Suzuki, Takashi Takemoto, Masashi Kono, *Member, IEEE*, and Tatsuya Saito, *Member, IEEE*

© 2014 Finisar Corporation Confidential

Best Way To Reduce Heat?

- Don't generate as much of it
- Power optimized for required reach and link budget

OM2H.2.pdf OFC/NFOEC Technical Digest © 2013 OSA

35-Gb/s VCSEL-Based Optical Link using 32-nm SOI CMOS Circuits

Jonathan E. Proesel, Benjamin G. Lee, Christian W. Baks, and Clint L. Schow
IBM T. J. Watson Research Center, 1101 Kitchawan Road, Yorktown Heights, NY 10598
jonproesel@us.ibm.com

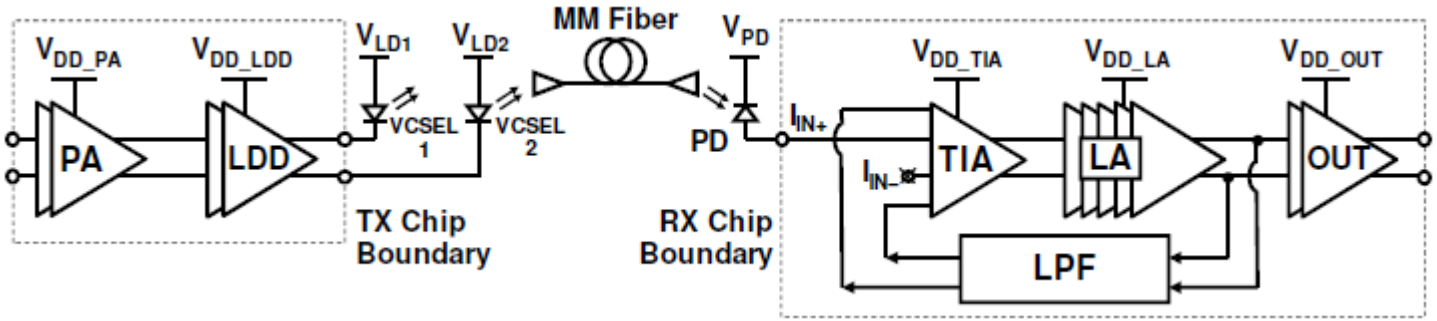

© 2014 Finisar Corporation Confidential

Best Way To Reduce Heat?

- 4m OM3 MMF
- 1pJ/bit at 25Gb/s
- 2.7pJ/bit at 35Gb/s

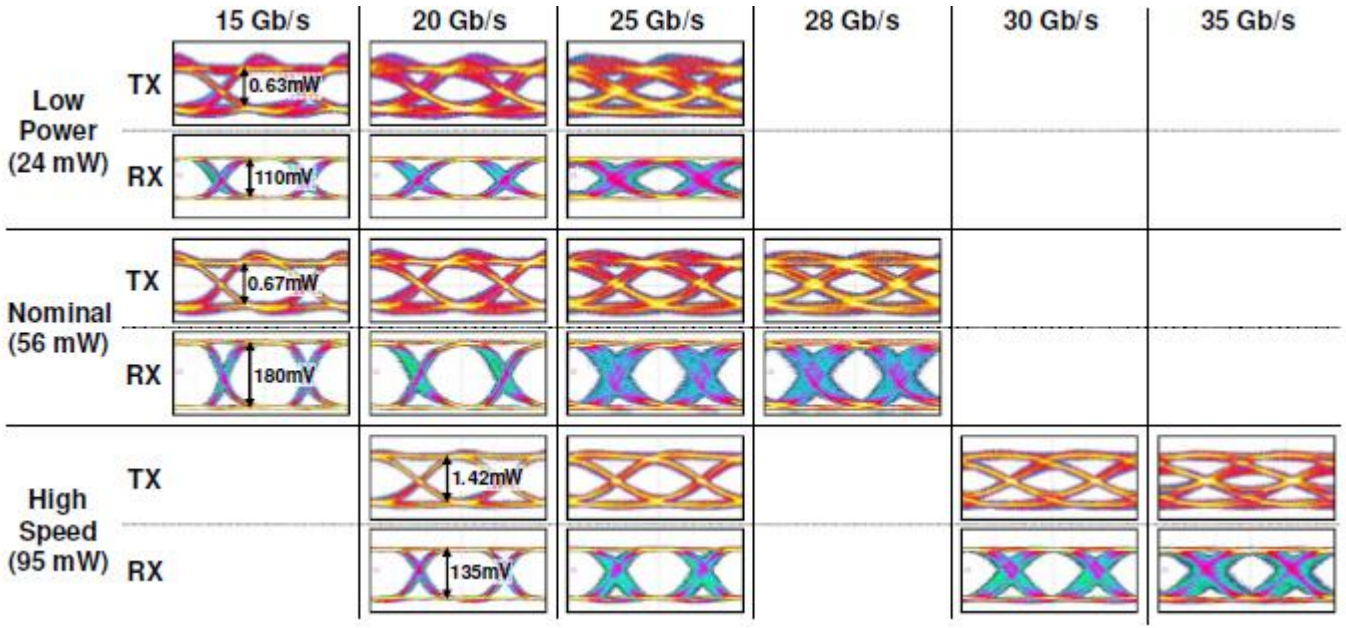

© 2014 Finisar Corporation Confidential

Some Latest Achievements

- 56Gb/s VCSEL transmitter

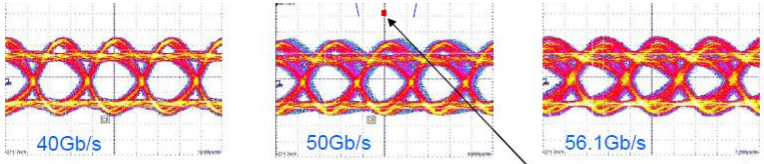

50G Long term:
Error Free ~3Pbits
15.5hrs
BER < 3E-16
(4m, 3 connectors)

- SiGe8HP 50Ω Driver + 480 Ohm Receiver
- Wirebonded not flip-chipped
- 2m 26/125 Fiber link with 2 connectors
- Total link power dissipation is 1.33W = 682mW Tx + 648mW Rx

→ 24pJ/bit, VCSEL contributes 0.24pJ/bit, ~1% of total energy

Link equalization settings optimized for 56Gb/s
Best results optimized for 40G = 0.59UI eye opening

18 Approved for Public Release, Distribution Unlimited.

© 2012 IBM Corporation

D.M. Kuchta *et al. OFC 2013*

- 600Gb/s - 24x25Gb/s VCSEL transmitter at 5pJ/bit

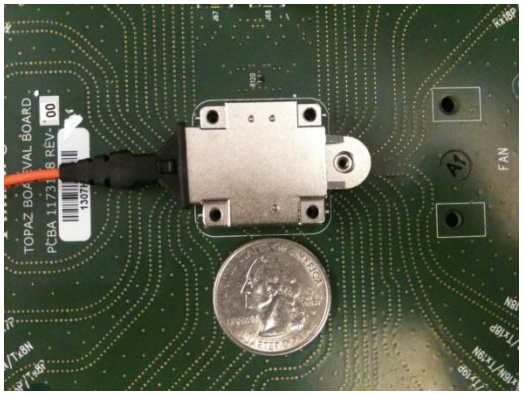

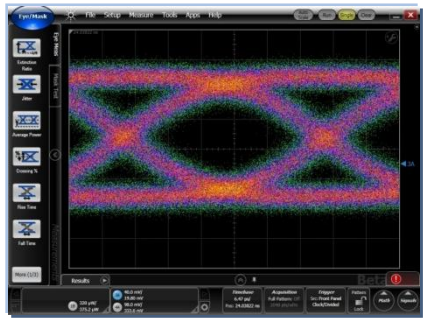

Finisar Demonstration at *OFC 2013*

Some Latest Achievements

F. Doany, OFC 2012 PDP5D.9

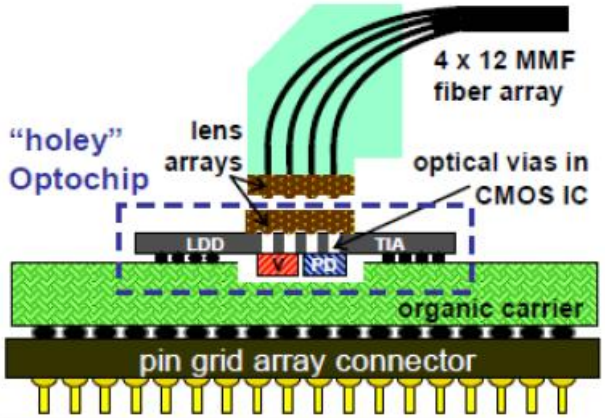

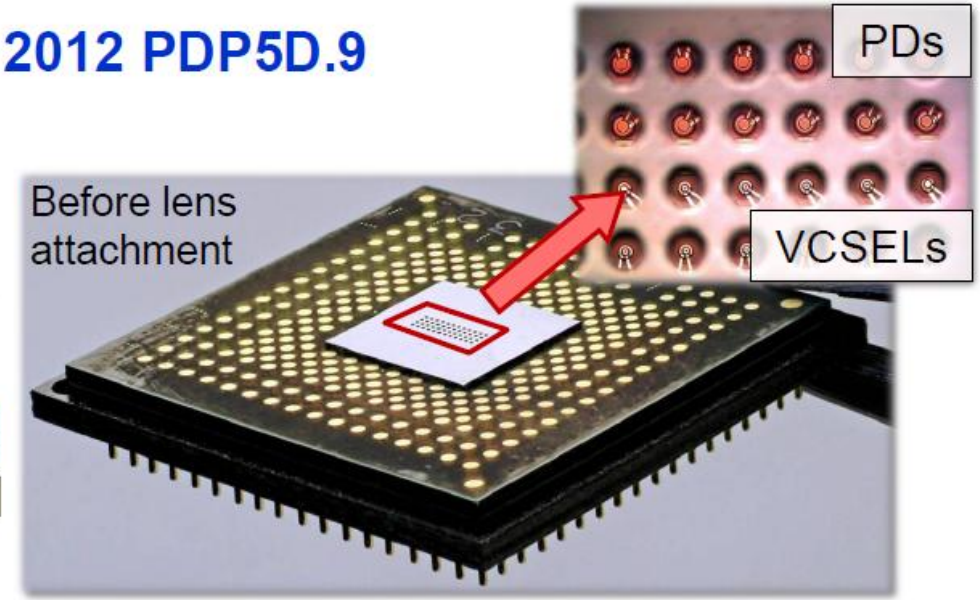

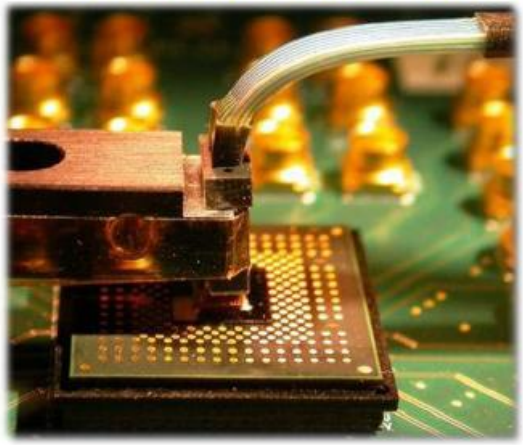

- **Tb/s target** → 24 TX + 24 RX @ 20 Gb/s = 0.96 Tb/s
- Circuit design focus on power efficiency, targeting 5 pJ/bit
- Single "holey" CMOS IC
- Unmodified bulk CMOS process + simple wafer-level post-processing for optical vias
- Dual-lens system → relaxed tolerances & efficient coupling

- F. E. Doany *et al.*, "Dense 24 Tx + 24 Rx Fiber-Coupled Optical Module Based on a Holey CMOS Transceiver IC," *ECTC 2010*, pp. 247–255.
- C.L. Schow *et al.*, "A 24-Channel 300Gb/s 8.2pJ/bit Full-Duplex Fiber-Coupled Optical Transceiver Module Based on a Single "Holey" CMOS IC," IEEE *JLT*, Feb 2011.

© 2011 IBM

C. Schow *et al. OFC 2012*

Some Latest Achievements

- "Holey" Optochip results

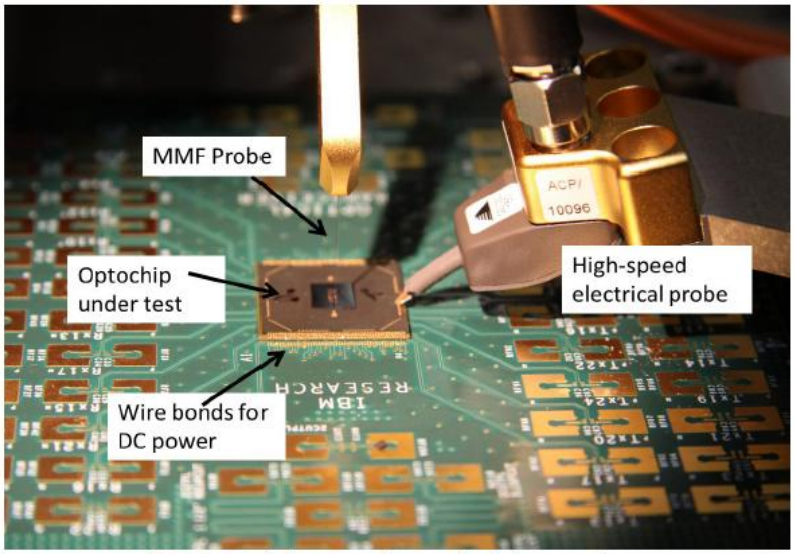

Probe-able version of chip carrier

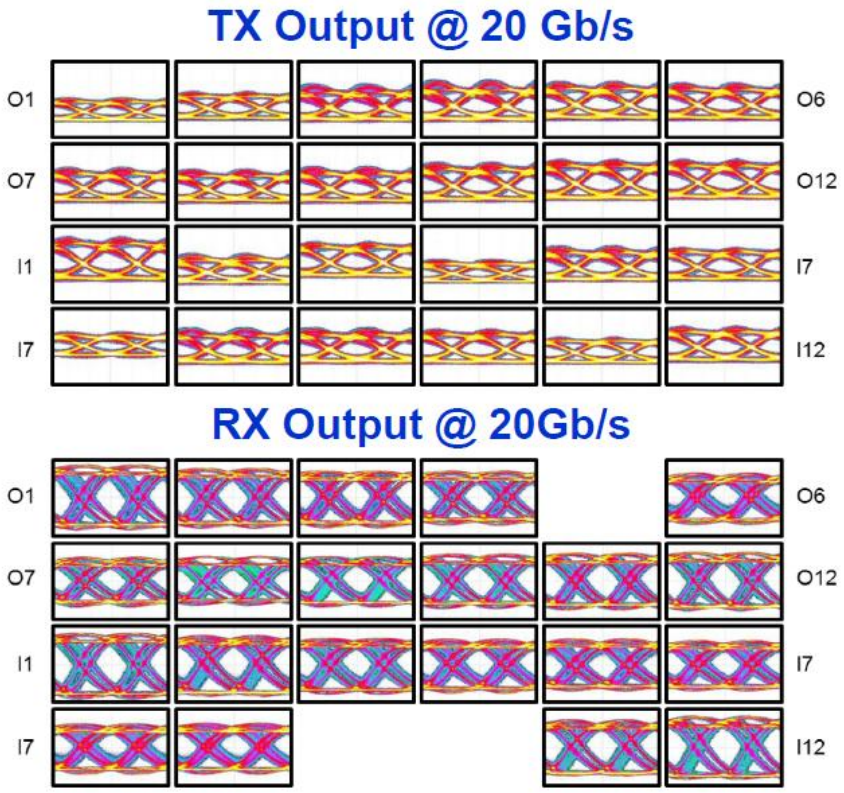

C. Schow *et al. OFC 2012*

© 2014 Finisar Corporation Confidential

Some Latest Achievements

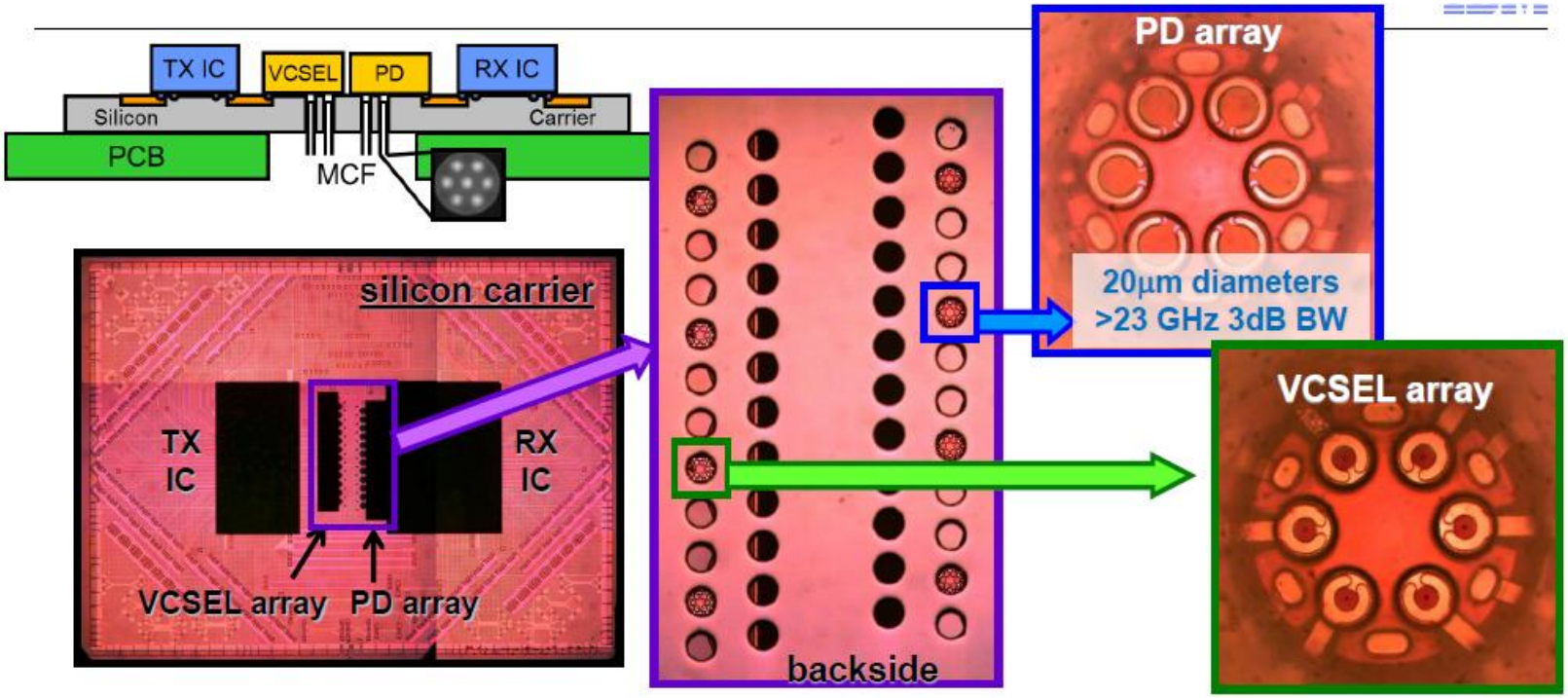

- 120 Gb/s over 100-m in one MMF strand: 6 cores at 20 Gb/s
- Uniform performance
- Low measured crosstalk

C. Schow *et al. OFC 2012*

Custom VCSEL/PD Arrays Matched to 4 Multicore Fibers

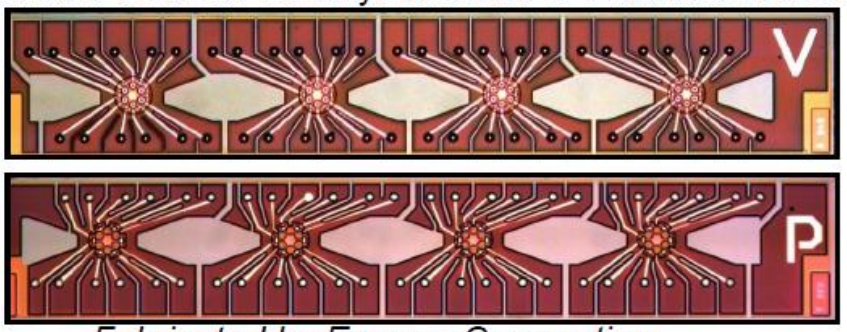

Fabricated by Emcore Corporation

9 B. Lee et al., "End-to-End Multicore Multimode Fiber Optic Link Operating up to 120 Gb/s," *IEEE JLT*, Mar. 2012.

© 2011 IBM

Silicon Photonics – What Is It?

InP Laser or InP layers fused onto Silicon

Silicon Optical Multiplexer

Silicon Optical Demultiplexer

Any of these integrated with electronics

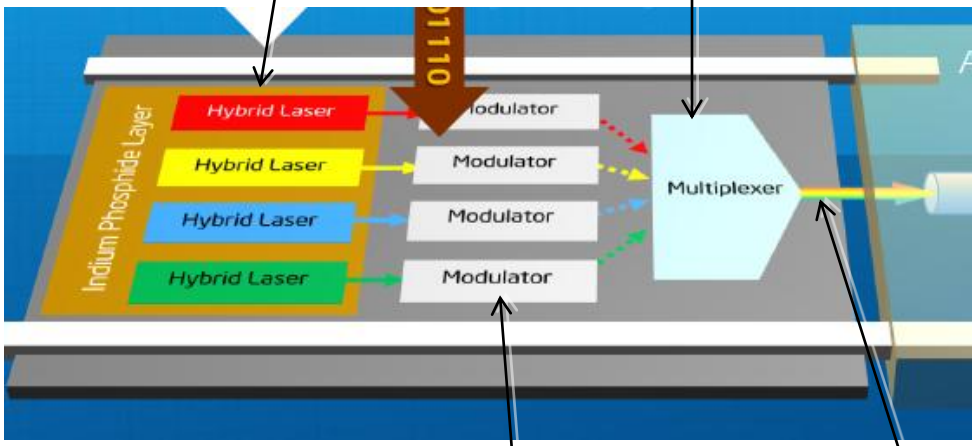

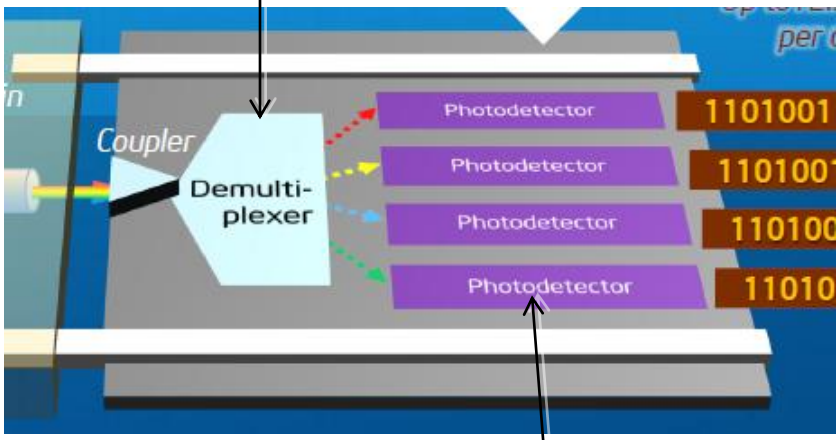

Silicon Modulators

Silicon Optical Waveguides

Silicon Photodetectors

- Silicon Photonics can mean any of the above
- Silicon Modulators
  - Can operate uncooled over wider temp than InP modulators
  - Inherently long wavelength, single mode, and externally modulated
  - Requires InP laser

© 2014 Finisar Corporation Confidential

Silicon Photonics

- Currently receiving a lot of attention and hence VC's $
- But careful analysis suggests that any speed and reach that VCSEL can serve, VCSEL solution is the most optimal solution because:
  - Multimode alignment is much more forgiving; 24-channel array of VCSEL can be aligned with one common single alignment step → lower cost
  - VCSEL is directly modulated and smaller → compact
  - VCSEL requires less power → can fit in a smaller footprint
  - VCSEL produces more optical power into the fiber → higher loss budget → higher system yield
- Even for some longwave applications, conventional optics will still be a preferred solution

© 2014 Finisar Corporation Confidential

Example of VCSEL vs. Silicon Photonics

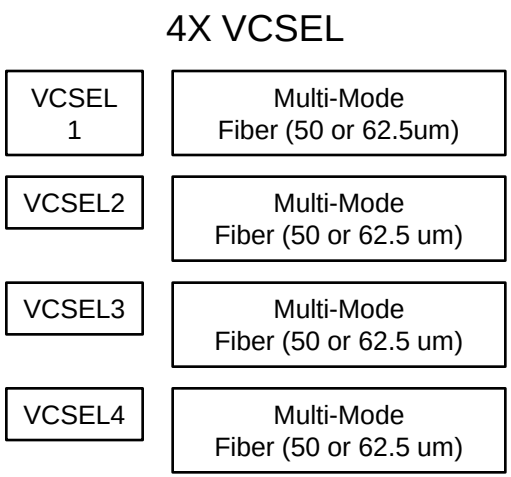

4 optical chips
4 Multi-Mode (50/62.5 um) Alignments

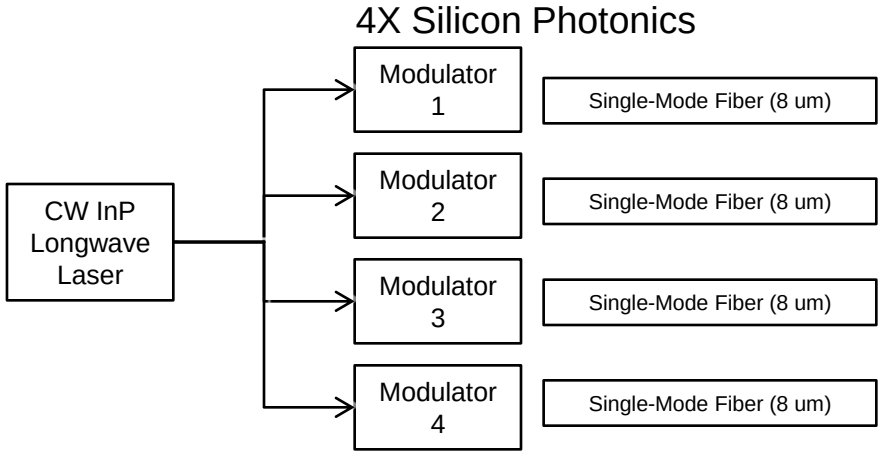

5 optical chips
1 Chip-to-Chip (3 um) Alignment
4 Single-Mode (8 um) Alignments

- Multi-Mode VCSEL are ~2/3 the optical industry volume
- MMF packaging lower cost than SMF (fiber alignment)
- MMF packaging is non-hermetic

© 2014 Finisar Corporation Confidential

Example of DFB vs. Silicon Photonics

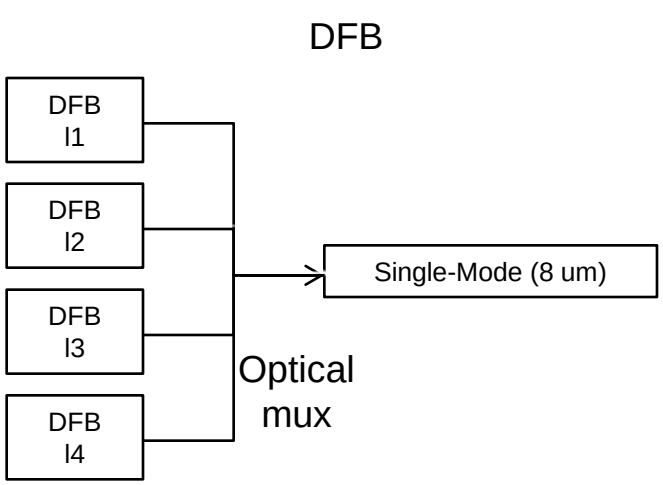

4 optical chips
5 Single-Mode (8 um) Alignments

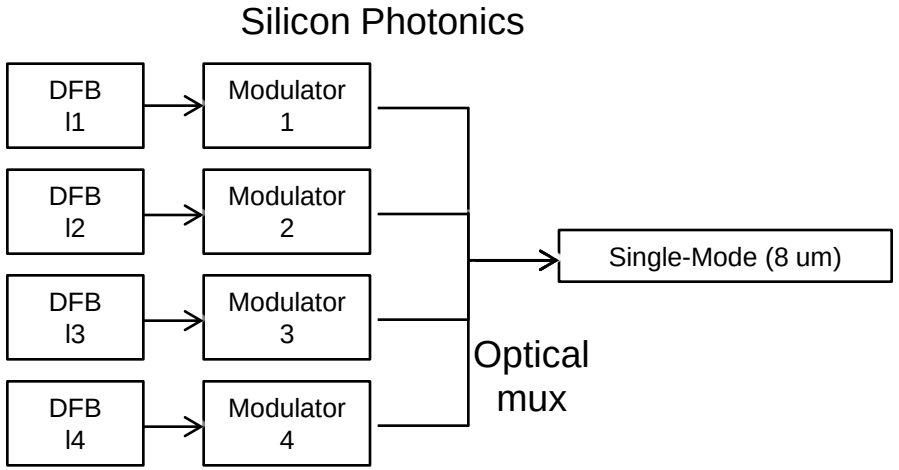

8 optical chips
4 Chip-to-Chip (3 um) Alignments
1 Single-Mode (8 um) Alignment

- Silicon Photonics requires more optical chips and more critical alignments than DFB Lasers
- Silicon Photonics high optical loss is a challenge to meet 6dB loss budget needed in most data centers

© 2014 Finisar Corporation Confidential

But …

- Recent development in integrating homogeneous III-V material on Si using molecular bonding could potentially reduce the cost of alignment and integration
- Aurrion, LETI, Skorpios and Intel are examples of companies working on this problem

© 2014 Finisar Corporation Confidential

LETI Hybrid Laser On Silicon

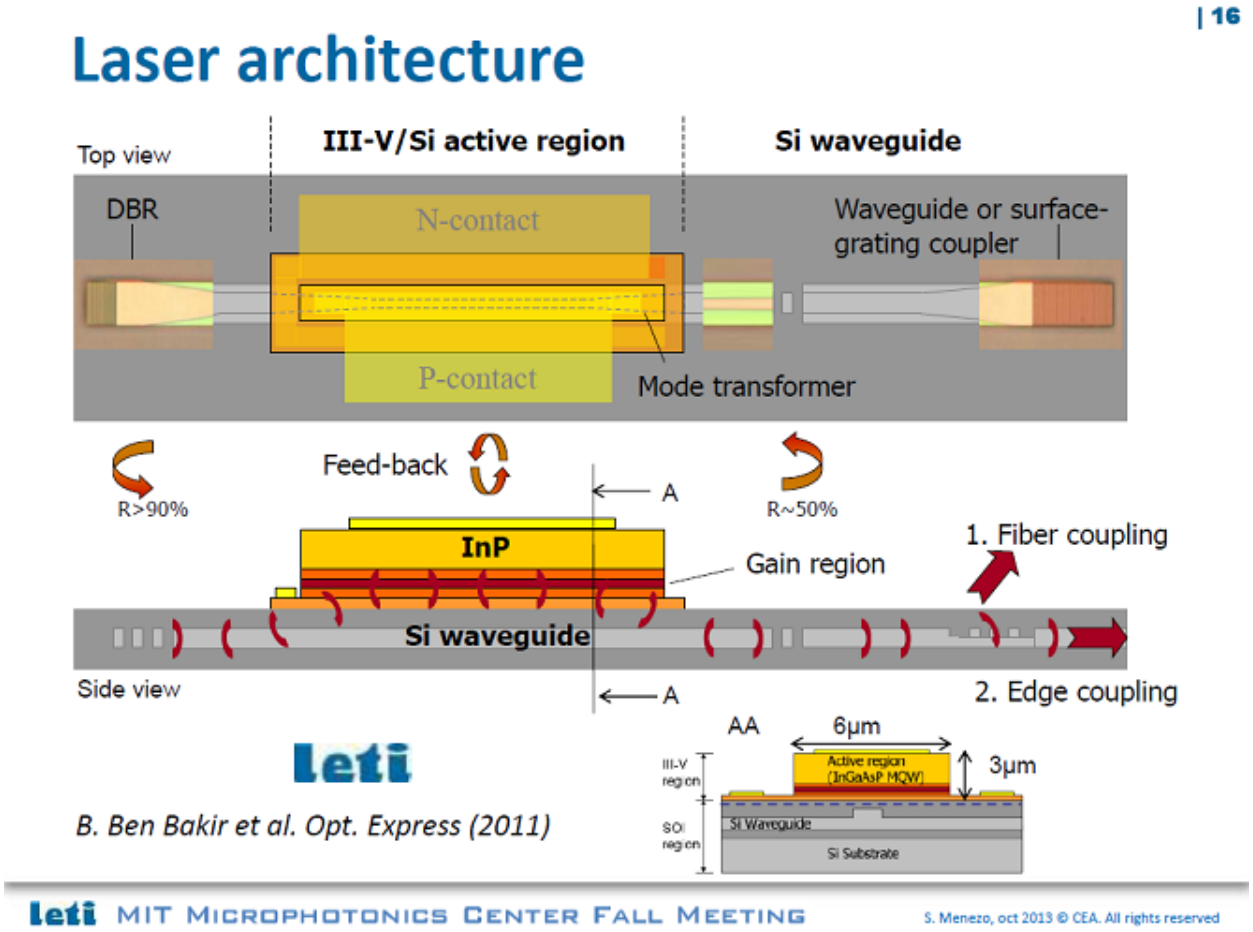

- Molecular bonding between III-V and silicon wafer where II-V is needed → low material cost
- Optical waveguide and gratings use conventional CMOS processes → high uniformity and yield
- Leverage wafer-level test infrastructure

© 2014 Finisar Corporation Confidential

LETI Hybrid Laser On Silicon

DBR lasers: 2013 results

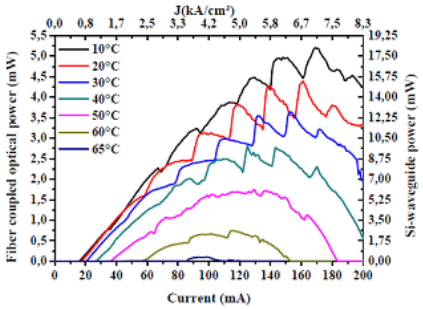

@ λ =1.5µm,
Ith <20mA,
17mW in the silicon waveguide
>50dB SMSR

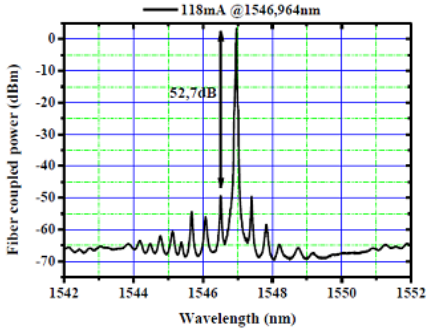

B. Ben Bakir, Leti Annual Review Meetings 2013
A. Descos et al., ECOC 2013
G. Beninca et al. 12.5Gbps OFDM modulation, CLEO 2013

S. Menezo, oct 2013 © CEA. All rights reserved

DBR laser: 12nm 4-WDM lasers

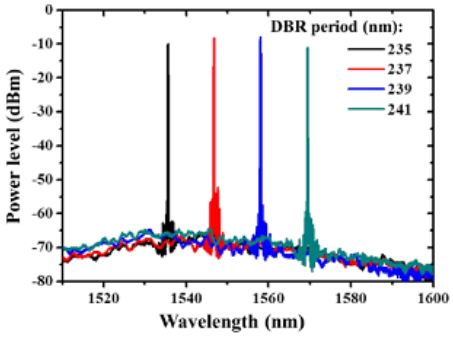

4 WDM-laser array

Each laser, tunable

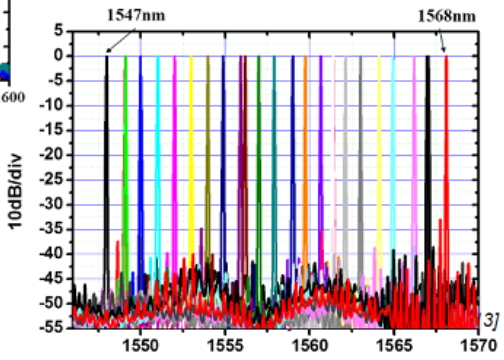

S. Menezo, oct 2013 © CEA. All rights reserved

© 2014 Finisar Corporation Confidential

Also …

- One cannot bet against silicon
- A lot of money has been and is being invested
- Many device physics issues are being solved both by industry and academia at an incredible rate
- It is coming down to a packaging exercise and aggressive push for adoption from the Silicon Photonics camp

© 2014 Finisar Corporation Confidential

Current Niche Applications

- In some applications Silicon Photonics maybe the only viable solution
  - Parallel LW where a single laser can be split to source multiple Si MZM → best power dissipation, yield and lowest cost of alignment when compared to discrete or arrayed DFB solution
  - Very high bit rates of 40Gb/s and above since VCSEL solution will be limited in distance due to modal bandwidth limitation and DFB solution has not been shown

© 2014 Finisar Corporation Confidential

Parallel LW Applications

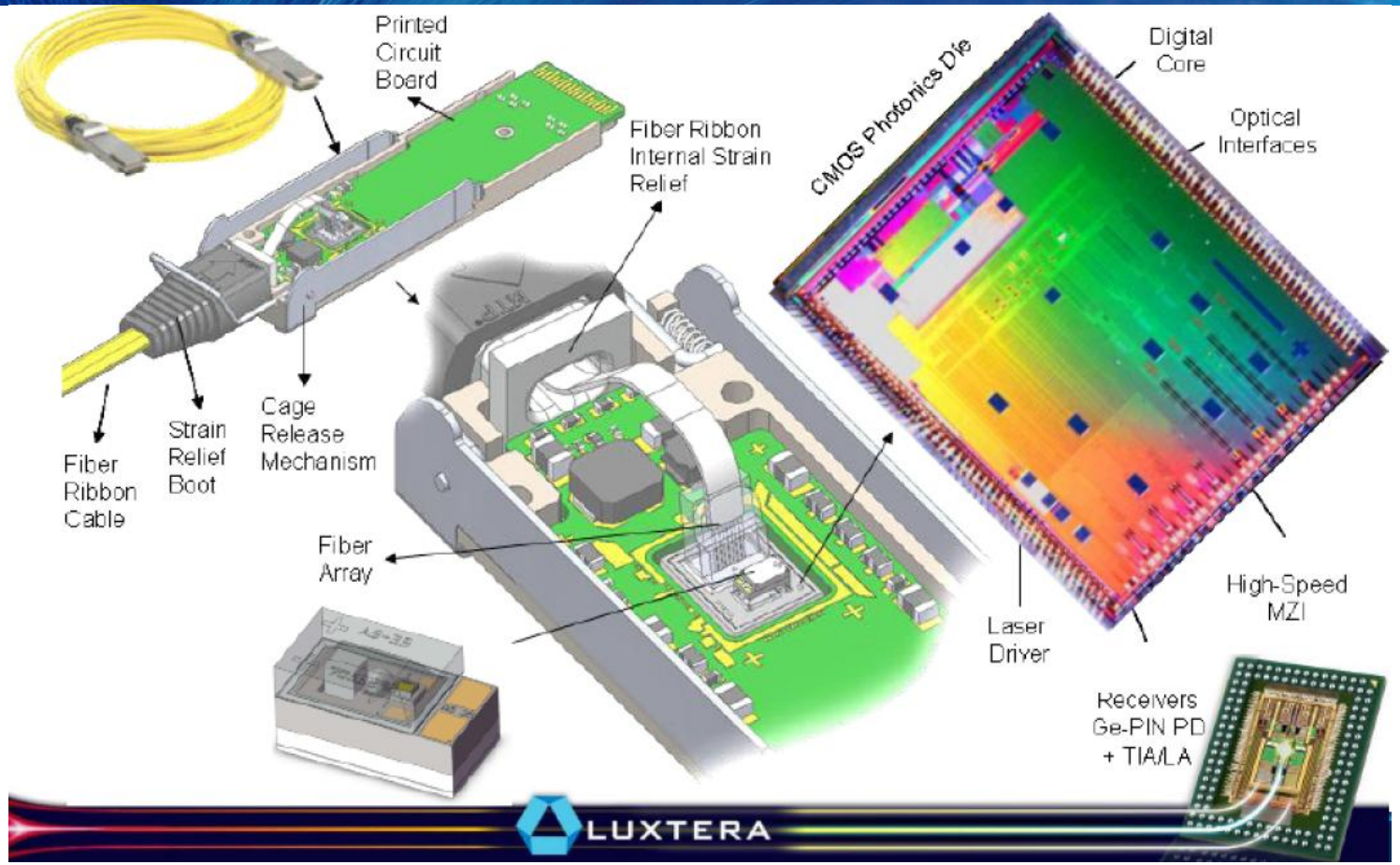

- Integrated MZM → excellent pitch control and yield
- Fiber array attachment divides one expensive alignment step by N channels

© 2014 Finisar Corporation Confidential

≥40Gb/s Applications

High-speed, low-loss silicon Mach–Zehnder modulators with doping optimization

Xi Xiao, Hao Xu, Xianyao Li, Zhiyong Li, Tao Chu, Yude Yu,* and Jinzhong Yu

State Key Laboratory on Integrated Optoelectronics, Institute of Semiconductors, Chinese Academy of Sciences, P. O. Box 912, Beijing, 100083, China

**yudeyu@semi.ac.cn*

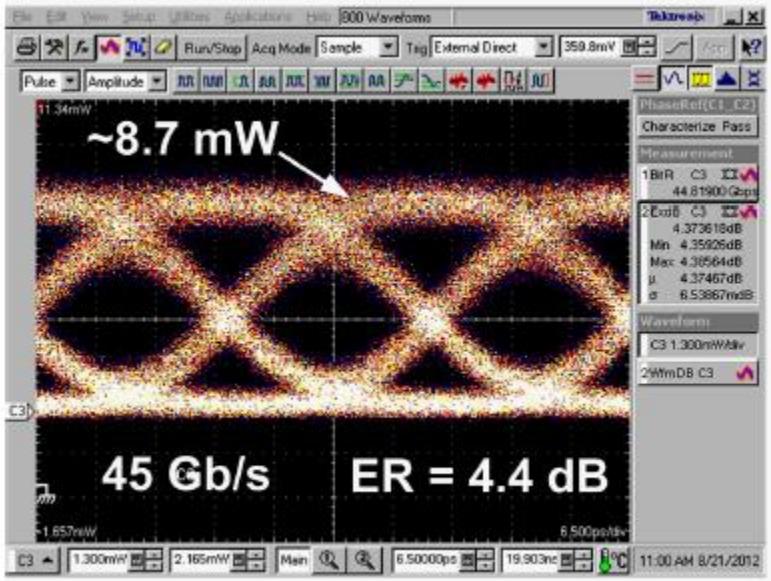

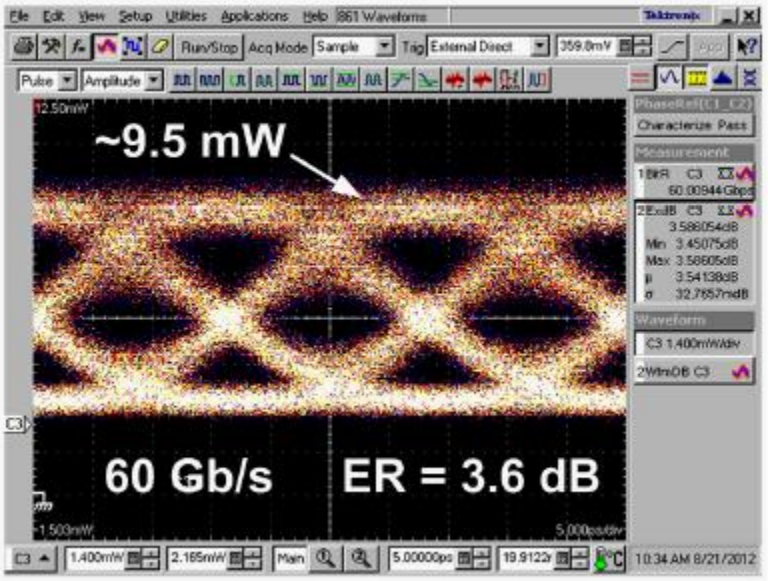

- Singapore's IME also reported a 50Gb/s Si MZM in May 2013

© 2014 Finisar Corporation Confidential

Summary

- Rapid increase in demand for bandwidth will continue to drive the need for and innovation in optical communications
- Adoption of optics will be widespread from long haul of 1000's km to very short distances of a few cm
- This requires innovation in device physics as well as IC design to achieve lowest cost, power and smallest footprint at the highest baud rate
- Many of these issues were discussed in this seminar

© 2014 Finisar Corporation Confidential

Acknowledgement

- Chris Cole
- Steve Joiner
- Daniel Mahgerefteh
- Chris Kocot
- Gilles Denoyer
- Georgios Kalogerakis
- Ilya Lyubomirsky
- Julie Eng
- David Allouche
- And many more …….

Thank You!

© 2014 Finisar Corporation Confidential

Appendix 1

© 2014 Finisar Corporation Confidential

Ethernet Standard Summary

Standard	Baud Rate	Length	Fiber Core Dia.	Optical Sources
Ethernet	20 MBd	2 km	62.5 µm	770 nm – 860 nm LED
Fast Ethernet	125 MBd	2 km	62.5 µm	1300 nm LED
Gigabit Ethernet	1.25 GBd	220 m	62.5 µm	770 nm – 860 nm Lasers
		550 m	62.5 µm	1300 nm Fabry-Perot Laser
		6 km	single-mode	1300 nm Fabry-Perot Laser
10-Gigabit Ethernet	10.3 GBd	26 m	62.5 µm	850 nm VCSEL
		300 m	New 50 µm	850 nm VCSEL
		10 km	single-mode	1300 nm DFB
		40 km	single-mode	1550 nm EML
	4 x 3.125 GBd	300 m	62.5 µm	1275, 1300, 1325, 1350 nm DFB
		10 km	single-mode	1275, 1300, 1325, 1350 nm DFB
	10.3 GBd with EDC	220 m	62.5 µm	1300 nm FP or DFB
		> 300m	Other MMF	1300 nm FP or DFB

© 2014 Finisar Corporation Confidential

Ethernet Standard Summary

Standard	Baud Rate	Length	Fiber Core Dia.	Optical Sources
40GBASE–SR4	4 @ 10.3125	100 m	4 Fiber Multi-mode	850 nm
40GBASE–LR4	4 @ 10.3125	10 km	Single-mode	1271, 1291, 1311, 1331 nm
40GBASE-FR	41.25 GBd	2 km	Single-mode	1530-1565 nm Laser
100GBASE-SR10	10 @ 10.3125	100 m	10 Fiber Multi-mode	850 nm
100GBASE-LR4	4 @ 25.78125	10 km	Single-mode	1295, 1300, 1304, 1309 nm
100GBASE-ER4	4 @ 28.78125	40 km	Single-mode	1295, 1300, 1304, 1309 nm
802.3bm Project Objectives:				
Define a 40 Gb/s PHY for operation over at least 40 km of SMF				
Define a 100 Gb/s PHY for operation up to at least 500 m of SMF				
Define a 100 Gb/s PHY for operation up to at least 100 m of MMF				
Define a 100 Gb/s PHY for operation up to at least 20 m of MMF				

© 2014 Finisar Corporation Confidential

Fiber Channel Standard Summary

Generation	1st Gen	2nd Gen	3rd Gen	4th Gen	5th Gen	6th Gen
Electrical / Optical Module	1GFC / GBIC/ SFP	2GFC / SFP	4GFC / SFP	8GFC / SFP+	16GFC / SFP+	32GFC / SFP+
Electrical Speeds(Gbps)	1 lane at 1.0625	1 lane at 2.125	1 lane at 4.25	1 lane at 8.5	1 lane at 14.025	1 lane at 28.05
Encoding	8b/10b	8b/10b	8b/10b	8b/10b	64b/66b	64b/66b
Availability	1997	2001	2006	2008	2011	2014

Generation	6th Gen	7th Gen	8th Gen
Electrical / Optical Module	32GFC and 128GFC /SFP+ and QSFP28	64GFC and 256GFC /SFP+ and QSFP56	128GFC and 512GFC /SFP+ and QSFP112
Electrical Speeds (Gbps)	1 lane of 28.05 4 lanes at 28.05	1 lanes of 56.1 4 lanes at 56.1	1 lane of 112.2 4 lanes at 112.2

Courtesy Scott Kipp, Brocade, OFC2013

© 2014 Finisar Corporation Confidential

Distance With MMF

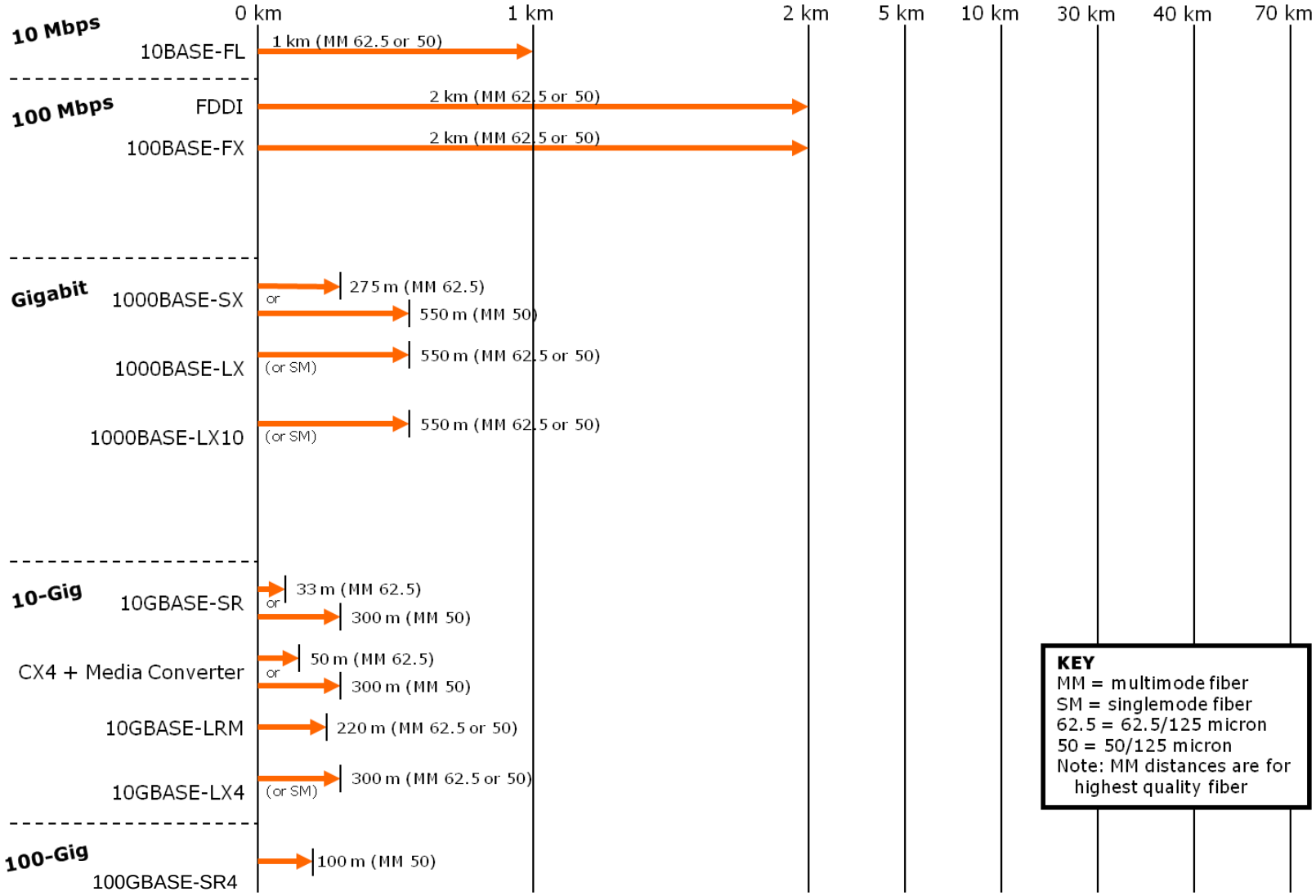

© 2014 Finisar Corporation Confidential

Distance With SMF

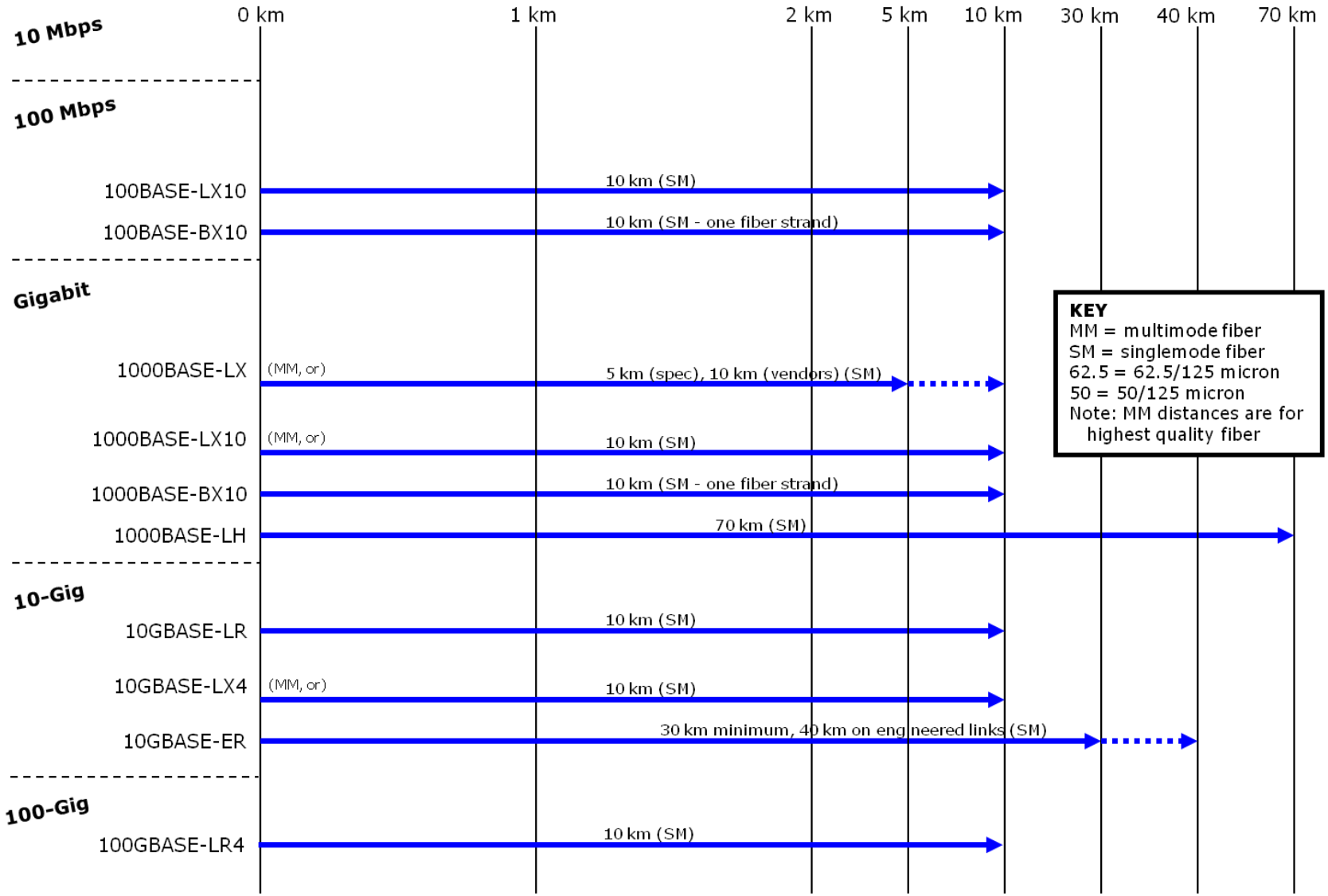

© 2014 Finisar Corporation Confidential

Appendix 2

© 2014 Finisar Corporation Confidential

40G Shortwave Parallel

- 40G interfaces
- QSFP for XLPPI
- CFP, CFP2 and CFP4 support all interfaces

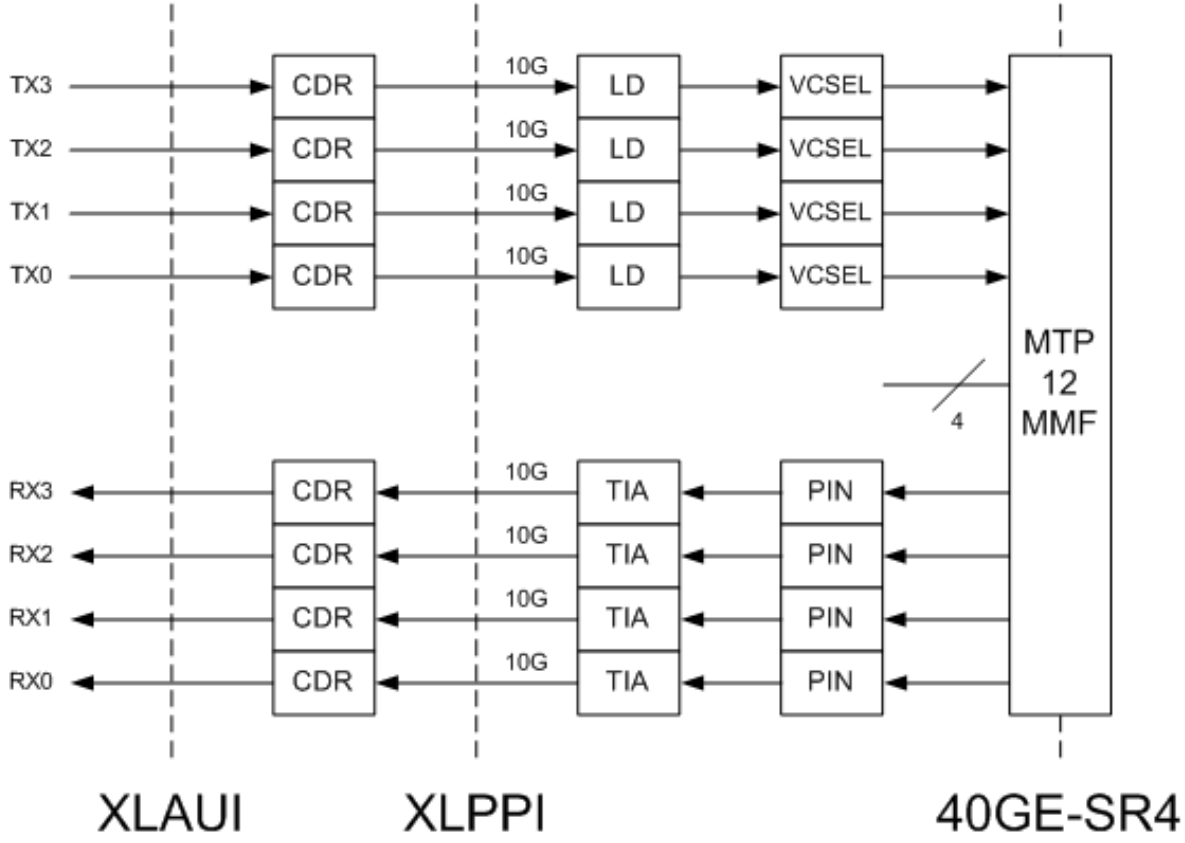

© 2014 Finisar Corporation Confidential

100G Shortwave Parallel

- 100G interfaces
- CFP and CFP2

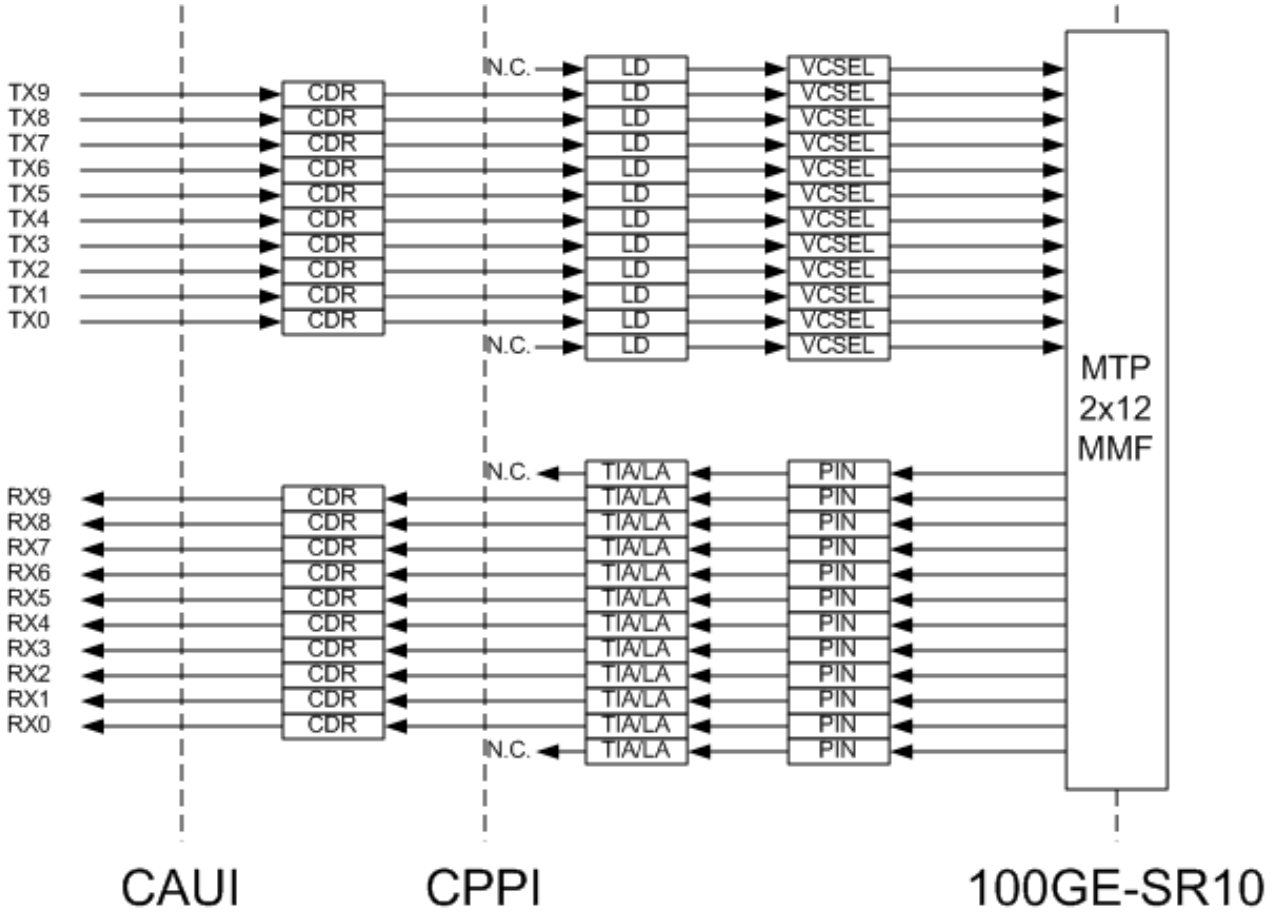

© 2014 Finisar Corporation Confidential

40G Longwave WDM

- 40G interfaces
- QSFP for XLPPI
- CFP, CFP2 and CFP4 support all interfaces

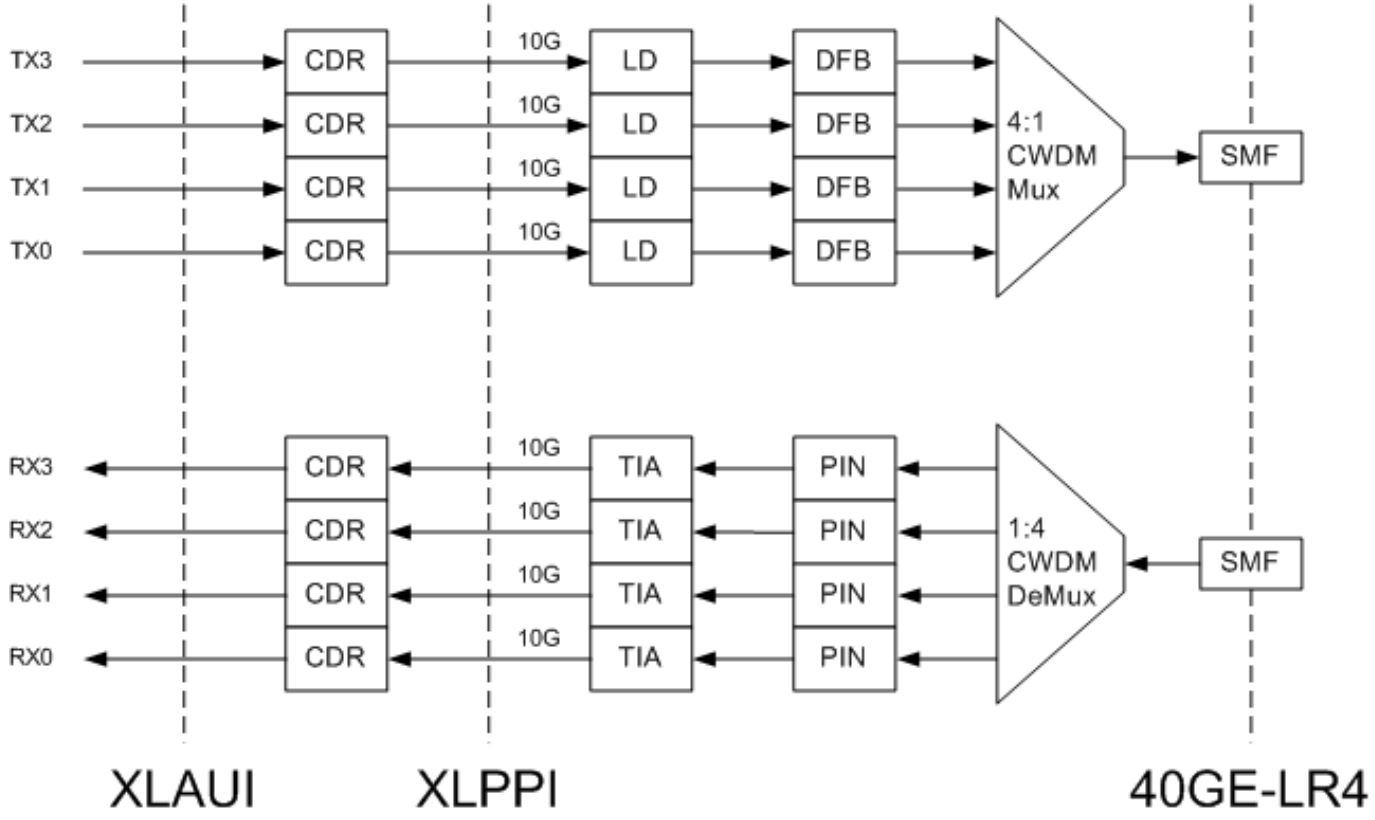

© 2014 Finisar Corporation Confidential

40G Longwave Serial

- 300pin transponder module

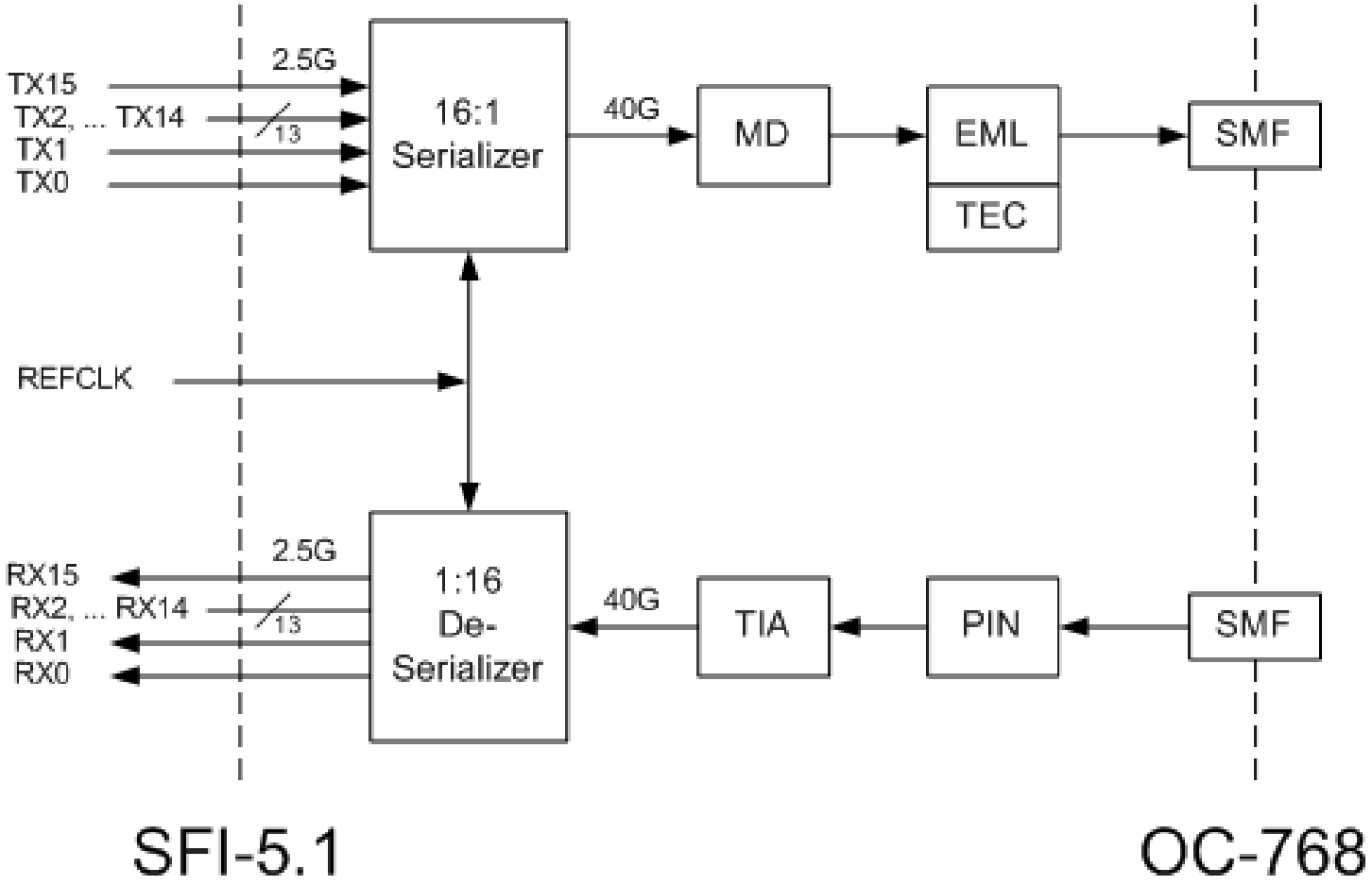

© 2014 Finisar Corporation Confidential

100G Longwave WDM

- Gen 1 100G interfaces
- CFP and CFP2

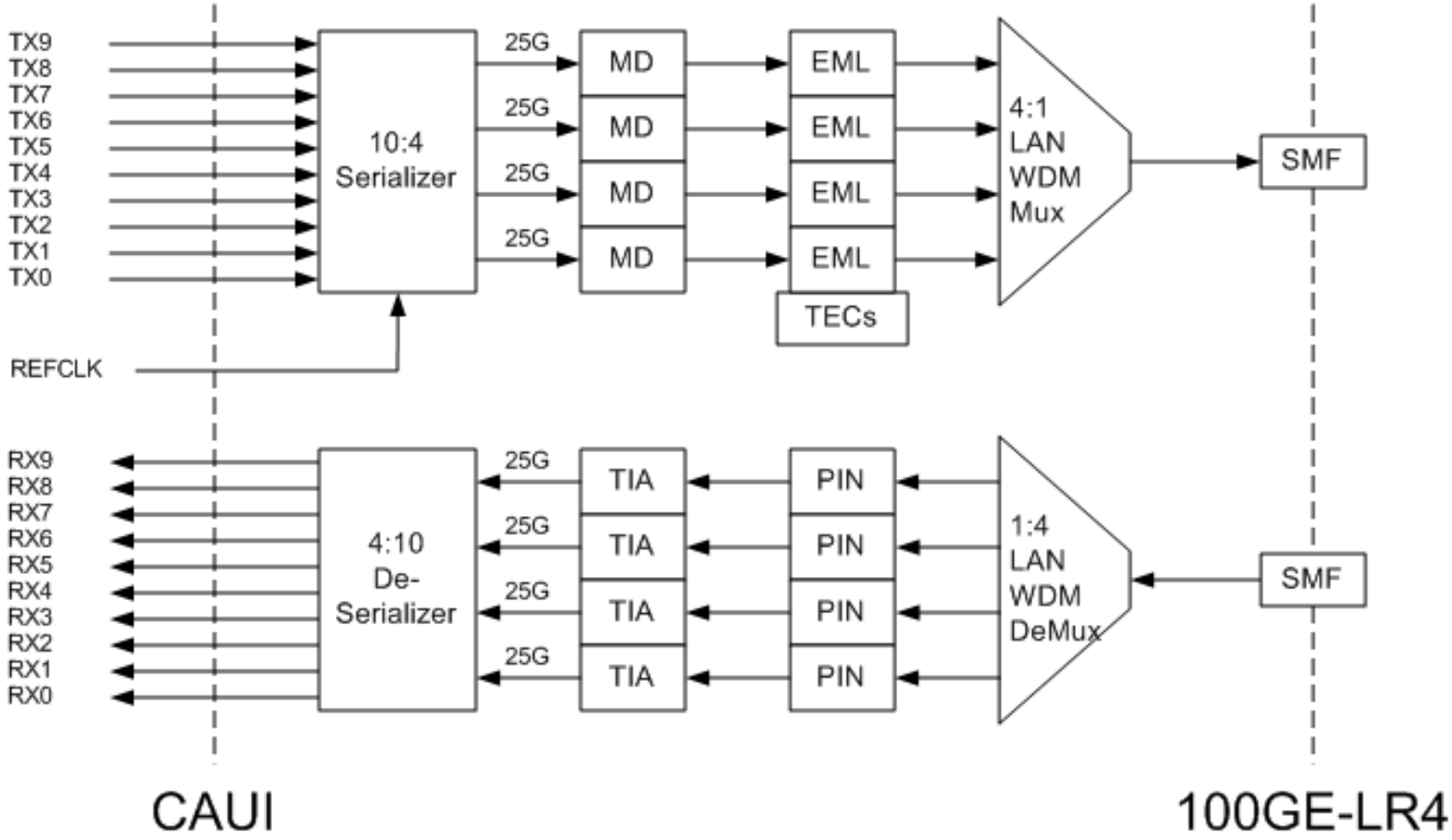

© 2014 Finisar Corporation Confidential

100G Longwave WDM

- Gen 2
- CFP2, CFP4 and QSFP28

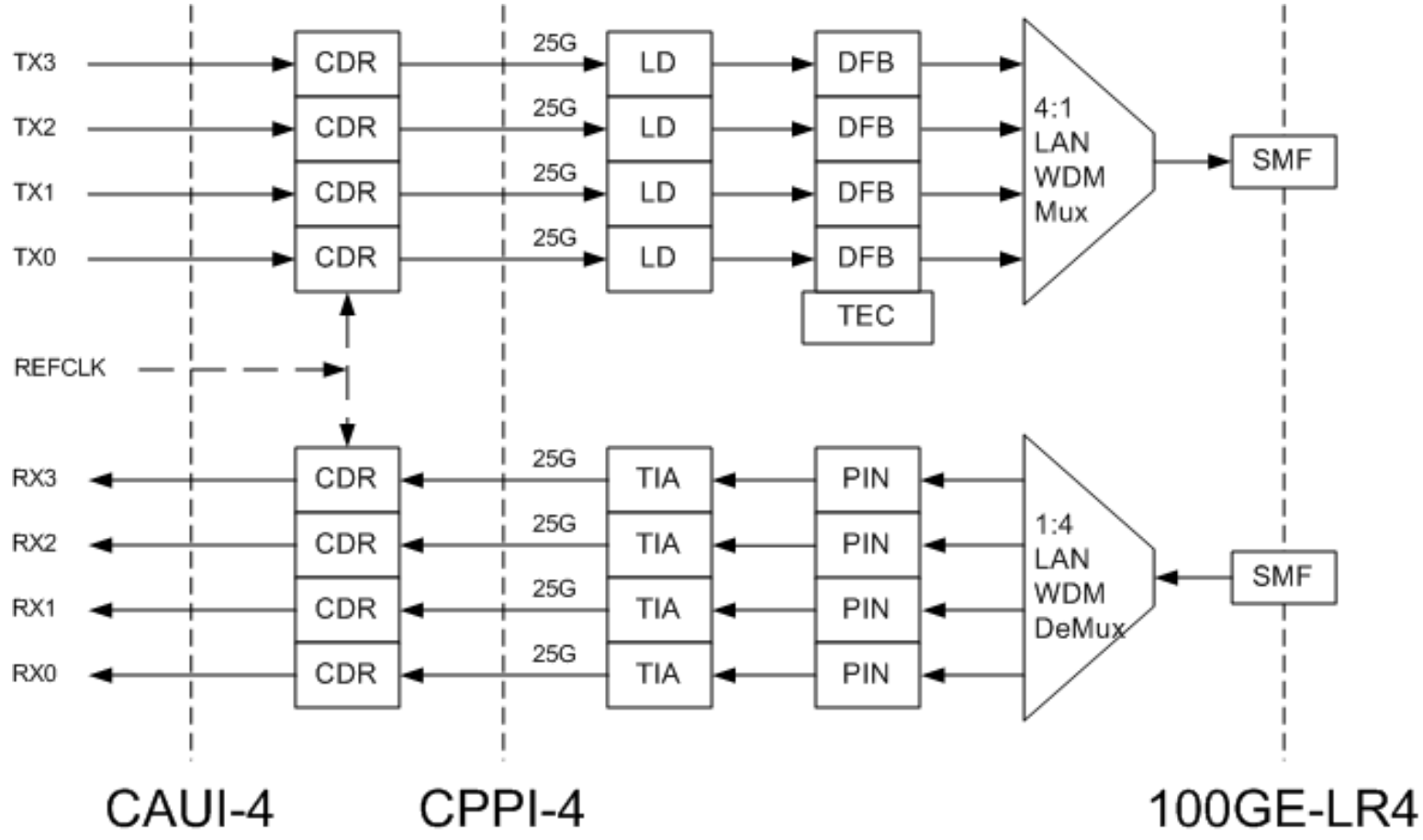

© 2014 Finisar Corporation Confidential